H3-45 VIP

REV.	DATE	O.C.	EFF.	DESCRIPTION	PAGE(S)	BY	CK.	APPR.
00	2013-01-14			First release	ALL	P.G.	P.G.	DGL
		2011099	D-2369	OBD13				
		2012051		Alt. Battery Management				
		2012023		I/O B Porte-Colis				
01	2013-05-01	2013050	D-2369	ACM Pwr Rly	5.1, 14.3	PG	DG	DG
02	2013-10-15	2013060	E-2549	Deutsch connectors on Urea system	0, A, 14.3, 25.1, 37.2, 40.1, C1	Gab	Gab	CLEM
		2013064	E-2549	Various harness modifications				
03	2014-01-10	2013108	E-2666	Temp Sensor on Urea sys with twisted pair	0, C1, 2.1, 3.1, 5.1, 6.1, 7.1, 14.3,	PG	PG	CLEM
		2013094		S.E. Hvac Moved over Evaporator	18.2, 26.2, 38.1,			
04	2014-02-04	2012034	E-2608	GHG14	15.1, C1	SD	SD	CLEM
05	2013-10-12	2013069	E-2524	Slide-out Power Relays	20.1, 20.2	EL	EL	CLEM
	2014-02-12	2013158	E-2666	Keyless Keypad - Add Skim Module	26.3, 29.1			
06	2014-03-04	2013158	E-2666	C1 Updated	0,C1	EL	EL	CLEM
07	2014-05-21	NA		Pages Updated	0,3.2	SB	CLEM	CLEM
08	2014-06-20	2014007	2752	AFSS	0,C1,40.1	SB	CLEM	CLEM
09	2014-09-12	2014132	2862	Bitzer Compressor	0,C1, E, G, 2.1, 15.1, 18.2	EL	CLEM	CLEM
10	2015-01-07	2014135	F-2929	NEW KEYLESS SYSTEM,	0,C1, 2.1, 6.2, 9.1, 10.1, 12.1, 14.1,	Gab	CLEM	CLEM
		2014122		TGW2,	26.3, 29.1, 32.1, 33.1, 37.1			
		2013172		FRONT PNEUMATIC PLATE,				
		2015001		OBD15				
11	2015-01-23	2015006	F-2929	Sun Visor	0,C1,38.1,37.1, G	SB	CLEM	CLEM
		2014122		TGW2,				
				C1 Updated				
12	2015-04-22	2015003	F-2997	Alternator 150 Amp Hi Temp w/larger				
		2015004	F-2923	gauge on main cable (000 AWG)	0, 3.1, 3.2	E.L.	CLEM	CLEM
13	2015-04-27	2015070	G-3144a	Keyless System Subnet	0, 6.2, 29.1	Gab	CLEM	CLEM
13-1	2015-11-28	2015027	3206	SW LUGG DOOR	0, C1, 9.1,12.1,10.1,14.3,15.1,18.2,32.1	SBEL	CLEM	CLEM
		2015091		RELEASE Q4-2015	25.1, G			

H3-45 VIP

REV.	DATE	O.C.	EFF.	DESCRIPTION	PAGE(S)	BY	CK.	APPR.
14	2015-09-28	2015147	G-3225	Charging system improvements	0, C1, 3.2, 5.1	Gab	CLEM	CLEM
15	2016-04-06	2016001	3369	OBD16	0, C1, 14.3, G, A	SB	CLEM	CLEM
16	2016-10-31	2015084	H-3645	Flush Floor Slide Out	0, 2.1, 3.1, 4.1, 7.1, 20.1, 20.2, 20.3, 20.4 25.1,G	Gab	AB	AB
17	2016-12-15	2017001 2016109	3747	GHG17	0,4.1,16.1,18.2,38.1,E,G,3.2 C1	SB JL	CLEM	CLEM
18	2017-10-25	2017080	3999	Low Press	0, C1, G, 18.2	SB	CLEM	CLEM

WIRING DIAGRAM INDEX

Information Pages

Multiplexed Devices Index	B1 – B25
Arrangement – Harness	C1
Glossary	D
Circuit Number Listing	E
Circuit Breaker code	F
Connectors code	G
Diode Number Code	H
Resistors Number Code	J
Fuses Code	L
Relay Code	K

Functions

A	
ACB	38.1
AFSS	9.1, 40.1
Air Dryer	37.2
B	
Back-up Camera	28.1
Back-up lights and alarm	26.3
Battery and Equalizer	1.1
Brake	12.1
C	
Charging System	3.2
Clearance lights rear & front	26.1,26.2
Cluster	10.1
Converter interface	36.1
Cornering Lights	26.3
Cruise control	14.1, 38.1
D	
Dash Lights	19.1
Differential lock	37.1
Docking Lights	26.3
Driver's Light and Backlight	19.1
Driver's Power Window	30.1
Driver's seat	35.2
E	
Engine block Heater	11.1
Engine brake and Retarder	12.1
Engine compt lighting	25.1
Engine Start	3.2
Engine ECM	14.1
Engine Override	14.1
Entrance door	29.1
Engine bloc heater	11.1
ESP	16.1
F	
Fast Idle	14.1
Fire Alarm	9.1
Flashers	26.1,26.2
Fog lights	26.3
Fuel Sender	10.1
Fuel Filter Preheater	13.1
G	
Grounds	2.1
H	
Hazard	26.1
Head Lights	26.1
Horn	9.1
Hvac Defroster	18.1
Hvac Passenger	18.2
Hvac Driver onlyr	18.3
K	
Keyless keypad	29.1
L	
Lane Departure Warning	39.1
Level low	32.1
Luggage compt lighting	25.1
Luggage door Lock/Unlock	33.1
Luggage door switches	24.1
M	
Main Distribution Ignition & Batt.	3.1
Main Distribution Wake-Up	3.3
Marker Lights	26.1,26.2
Mirror Ramco	31.1
Multiplexing power distribution	7.1
Multiplexing Network	6.1
Network	6.2
P	
Park Brake Sensor	12.1
Trailer Brake Sensor	12.1
Power Distribution FJB	4.1
Power Distribution RJB	5.1
Power Outlet	30.1
Pneumatic Cut-Out Acc sol	9.1
R	
Radiator Fan Clutch	13.1
Rear junction box door fan	11.1
S	
Service Brake Relay	12.1
Slide out (1-2)	20.1
Slide out (3-4)	20.2
Spare Wires	8.1
Stop lights	26.2
Sun Visor	38.1
Steering Control ZF	37.1
Steering Multi-functions	38.1
T	
Tag	32.1
Tail and Licence Lights	26.2
Transmission ECU	15.1-15.2
Trailer Package	26.4
TPMS	39.1
W	
Window Ajar &Awning	27.1
Wiper & Washer	34.1

WIRING DIAGRAM INDEX

Information Pages

Multiplexed Devices Index	B1 – B25
Arrangement – Harness	C1
Glossary	D
Circuit Number Listing	E
Circuit Breaker code	F
Connectors code	G
Diode Number Code	H
Resistors Number Code	J
Fuses Code	L
Relay Code	K

Functions

A	
ACB	38.1
AFSS	9.1, 40.1
Air Dryer	37.2
B	
Back-up Camera	28.1
Back-up lights and alarm	26.3
Battery and Equalizer	1.1
Brake	12.1
C	
Charging System	3.2
Clearance lights rear & front	26.1,26.2
Cluster	10.1
Converter interface	36.1
Cornering Lights	26.3
Cruise control	14.1, 38.1
D	
Dash Lights	19.1
Differential lock	37.1
Docking Lights	26.3
Driver's Light and Backlight	19.1
Driver's Power Window	30.1
Driver's seat	35.2
E	
Engine block Heater	11.1
Engine brake and Retarder	12.1
Engine compt lighting	25.1
Engine Start	3.2
Engine ECM	14.1
Engine Override	14.1
Entrance door	29.1
Engine bloc heater	11.1
ESP	16.1
F	
Fast Idle	14.1
Fire Alarm	9.1
Flashers	26.1,26.2
Fog lights	26.3
Fuel Sender	10.1
Fuel Filter Preheater	13.1
G	
Grounds	2.1
H	
Hazard	26.1
Head Lights	26.1
Horn	9.1
Hvac Defroster	18.1
Hvac Passenger	18.2
Hvac Driver onlyr	18.3
K	
Keyless keypad	29.1
L	
Lane Departure Warning	39.1
Level low	32.1
Luggage compt lighting	25.1
Luggage door Lock/Unlock	33.1
Luggage door switches	24.1
M	
Main Distribution Ignition & Batt.	3.1
Main Distribution Wake-Up	3.3
Marker Lights	26.1,26.2
Mirror Ramco	31.1
Multiplexing power distribution	7.1
Multiplexing Network	6.1
Network	6.2
P	
Park Brake Sensor	12.1
Power Distribution FJB	4.1
Power Distribution RJB	5.1
Power Outlet	30.1
Pneumatic Cut-Out Acc sol	9.1
R	
Radiator Fan Clutch	13.1
Rear junction box door fan	11.1
S	
Service Brake Relay	12.1
Slide out (1-2)	20.1
Slide out (3-4)	20.2
Spare Wires	8.1
Stop lights	26.2
Sun Visor	38.1
Steering Control ZF	37.1
Steering Multi-functions	38.1
T	
Tag	32.1
Tail and Licence Lights	26.2
Transmission ECU	15.1-15.2
Trailer Brake Sensor	12.1
Trailer Package	26.4
TPMS	39.1
W	
Window Ajar &Awning	27.1
Wiper & Washer	34.1

WIRING DIAGRAM INDEX

Information Pages

Multiplexed Devices Index	B1 – B25
Arrangement – Harness	C1
Glossary	D
Circuit Number Listing	E
Circuit Breaker code	F
Connectors code	G
Diode Number Code	H
Resistors Number Code	J
Fuses Code	L
Relay Code	K

Functions

A	
ACB	38.1
AFSS	9.1, 40.1
Air Dryer	37.2
B	
Back-up Camera	28.1
Back-up lights and alarm	26.3
Battery and Equalizer	1.1
Brake	12.1
C	
Charging System	3.2
Clearance lights rear & front	26.1,26.2
Cluster	10.1
Converter interface	36.1
Cornering Lights	26.3
Cruise control	14.1, 38.1
D	
Dash Lights	19.1
Differential lock	37.1
Docking Lights	26.3
Driver's Light and Backlight	19.1
Driver's Power Window	30.1
Driver's seat	35.2
E	
Engine block Heater	11.1
Engine brake and Retarder	12.1
Engine compt lighting	25.1
Engine Start	3.2
Engine ECM	14.1
Engine Override	14.1
Entrance door	29.1
ESP	16.1
F	
Fast Idle	14.1
Fire Alarm	9.1
Flashers	26.1,26.2
Fog lights	26.3
Fuel Sender	10.1
Fuel Filter Preheater	13.1
G	
Grounds	2.1
H	
Hazard	26.1
Head Lights	26.1
Horn	9.1
Hvac Defroster	18.1
Hvac Passenger	18.2
Hvac Driver onlyr	18.3
K	
Keyless keypad	29.1
L	
Lane Departure Warning	39.1
Level low	32.1
Luggage compt lighting	25.1
Luggage door Lock/Unlock	33.1
Luggage door switches	24.1
M	
Main Distribution Ignition & Batt.	3.1
Main Distribution Wake-Up	3.3
Marker Lights	26.1,26.2
Mirror Ramco	31.1
Multiplexing power distribution	7.1
Multiplexing Network	6.1
Network	6.2
P	
Park Brake Sensor	12.1
Power Distribution FJB	4.1
Power Distribution RJB	5.1
Power Outlet	30.1
R	
Radiator Fan Clutch	13.1
Rear junction box door fan	11.1
S	
Service Brake Relay	12.1
Slide out (1-2)	20.1
Slide out (3-4)	20.2
Spare Wires	8.1
Stop lights	26.2
Sun Visor	38.1
Steering Control ZF	37.1
Steering Multi-functions	38.1
T	
Tag	32.1
Tail and Licence Lights	26.2
Transmission ECU	15.1
Trailer Brake Sensor	12.1
Trailer Package	35.7
TPMS	39.1
W	
Window Ajar &Awning	27.1
Wiper & Washer	34.1

MULTIPLEX OUTPUT LIST

O_xx... = Physical Ouput Pin ; I_xx... = Physical Input Pin ; D_xx... = CAN Network Signal from the HVAC control Head ; B_xx.. = Multiplex system global Network Variable

Module.Pin#	Signal name		Page	Connected devices	Input involved			
.	O_AcCluSol				B_TstModHvac	.		#
					B_TstModSAC	.		
A36.JA:10	O_DiffLockTT			A14A.C:11	I_DiffLockSw	A43.J1:9		
					I_IgnKeySw	A36.JB:2	3.2	
A36.JA:12	O_ClusterEsc		10.1	Res34:1, A14A.A:5	D_Stw_Sw17	.		
					I_BlinkSw	A43.J1:20		
					I_BrkLtSeFrSig	A36.JB:13	12.1	
					I_ParkBrSe	A36.JB:9	12.1	
A36.JA:13	O_EngineRun	Engine Run Signal	3.2	A15:6	B_EngineRun	.		
					B_OneAltCharging	.		
					D_OnOffDrvSw	.		
					I_AccKeySw	A36.JB:6	3.2	
					I_BatMonMod54	A54.J1:24	6.1	
					I_FrStrtEnSw	A52.J1:9	3.2	
					I_IgnKeySw	A36.JB:2	3.2	
					I_RrStrtEnSw	A52.J1:10	3.2	
A36.JA:14	O_ClusterSelect		10.1	Res33:1, A14A.A:4	D_Stw_Sw16	.		
					I_BrkLtSeFrSig	A36.JB:13	12.1	
					I_HiBeamCallSw	A43.J1:3	26.1	
					I_ParkBrSe	A36.JB:9	12.1	
A36.JA:15	O_WakeUp	WakeUp Relay	3.3		I_AccKeySw	A36.JB:6	3.2	
					I_EntDrUnlockSw	A41.J1:8		
					I_FrStrtEnSw	A52.J1:9	3.2	
					I_HazardSw	A36.JB:4	26.1	
					I_IgnKeySw	A36.JB:2	3.2	
					I_RrCutOutSw	A36.JB:21	3.2	
					I_RrStrtEnSw	A52.J1:10	3.2	
					I_WakeUp	A36.JB:5	38.1	
A36.JA:16	O_ClusterUp		10.1	Res35:1, A14A.A:6	D_Stw_Sw18	.		
					I_BrkLtSeFrSig	A36.JB:13	12.1	
					I_ParkBrSe	A36.JB:9	12.1	
					I_RHFlshSw	A48.J1:12	26.1	
A36.JA:17	O_CutOutRel	Emergency CutOut Relay	3.2		I_FireExt2ndAlm	A44.J1:10	38.1	
					I_IgnKeySw	A36.JB:2	3.2	
A36.JA:18	O_ClusterDown		10.1	Res36:1, A14A.A:7	D_Stw_Sw19	.		
					I_BrkLtSeFrSig	A36.JB:13	12.1	
					I_LHFlshSw	A45.J1:9	26.1	
					I_ParkBrSe	A36.JB:9	12.1	
A36.JA:24	O_LaneDepMotLef	Lane Departure Motor Left	39.1	Mo60:2	I_IgnKeySw	A36.JB:2	3.2	
A36.JA:25	O_LaneDepMotRht	Lane Departure Motor Right	39.1	Mo61:2	I_IgnKeySw	A36.JB:2	3.2	
A36.JA:6	O_DrUnlockRly	Luggages doors unlocks relays			I_KeylessLuggUnl	A41.J1:18		
					I_LugDorULkSw	A41.J1:20	18.2	
A36.JA:7	O_DrLockRly	Luggages doors locks relays			I_AccKeySw	A36.JB:6	3.2	

MULTIPLEX OUTPUT LIST

O_xx... = Physical Ouput Pin ; I_xx... = Physical Input Pin ; D_xx... = CAN Network Signal from the HVAC control Head ; B_xx.. = Multiplex system global Network Variable

Module.Pin#	Signal name		Page	Connected devices	Input involved		
A36.JA:7	O_DrLockRly	Luggages doors locks relays			I_EntDrUnlockSw	A41.J1:8	
					I_FrStrtEnSw	A52.J1:9	3.2
					I_HazardSw	A36.JB:4	26.1
					I_IgnKeySw	A36.JB:2	3.2
					I_KeylessLockAll	A41.J1:19	
					I_LugDorLkSw	A41.J1:17	18.1
					I_RrCutOutSw	A36.JB:21	3.2
					I_RrStrtEnSw	A52.J1:10	3.2
					I_WakeUp	A36.JB:5	38.1
A41.J1:11	O_ConvWakeUp	Converter wake up signal	32.1	CC2:1, FREE:FREE, CC2:1	I_AccKeySw	A36.JB:6	3.2
					I_EntDrUnlockSw	A41.J1:8	
					I_FrStrtEnSw	A52.J1:9	3.2
					I_HazardSw	A36.JB:4	26.1
					I_IgnKeySw	A36.JB:2	3.2
					I_RrCutOutSw	A36.JB:21	3.2
					I_RrStrtEnSw	A52.J1:10	3.2
					I_WakeUp	A36.JB:5	38.1
A41.J1:12	O_DoorUnlockMo	Entrance door unlock motor	29.1	R36:86	I_AccKeySw	A36.JB:6	3.2
					I_EntDorLockSw	A41.J1:9	
					I_EntDorOpSe	A41.J1:5	
					I_EntDrUnlockSw	A41.J1:8	
					I_FrStrtEnSw	A52.J1:9	3.2
					I_HazardSw	A36.JB:4	26.1
					I_IgnKeySw	A36.JB:2	3.2
					I_KeylessDrUnl	A41.J1:4	
					I_KeylessLockAll	A41.J1:19	
					I_RrCutOutSw	A36.JB:21	3.2
					I_RrStrtEnSw	A52.J1:10	3.2
					I_WakeUp	A36.JB:5	38.1
A41.J1:13	O_EntDorUpperPen	Entrance Door Upper Pen	11.1		I_ParkBrSe	A36.JB:9	12.1
A41.J1:14	O_DoorLockMo	Entrance door lock motor	32.1	R37:86	I_AccKeySw	A36.JB:6	3.2
					I_EntDorLockSw	A41.J1:9	
					I_EntDorOpSe	A41.J1:5	
					I_EntDrUnlockSw	A41.J1:8	
					I_FrStrtEnSw	A52.J1:9	3.2
					I_HazardSw	A36.JB:4	26.1
					I_IgnKeySw	A36.JB:2	3.2
					I_KeylessDrUnl	A41.J1:4	
					I_KeylessLockAll	A41.J1:19	
					I_RrCutOutSw	A36.JB:21	3.2
					I_RrStrtEnSw	A52.J1:10	3.2
					I_WakeUp	A36.JB:5	38.1
A41.J1:15	O_ConvParkBrk	Converter park brake signal	32.1	CC2:4, FREE:FREE, CC2:4	I_ParkBrSe	A36.JB:9	12.1

MULTIPLEX OUTPUT LIST

O_xx... = Physical Ouput Pin ; I_xx... = Physical Input Pin ; D_xx... = CAN Network Signal from the HVAC control Head ; B_xx.. = Multiplex system global Network Variable

Module.Pin#	Signal name		Page	Connected devices	Input involved		
A41.J1:16	O_WakeUpA41		32.1	A36.JB:5	I_AccKeySw	A36.JB:6	3.2
					I_DrvLtSw	A41.J1:2	
					I_EntDorLockSw	A41.J1:9	
					I_EntDorOpSe	A41.J1:5	
					I_EntDrUnlockSw	A41.J1:8	
					I_FireSensorA36	A41.J1:10	22.1
					I_FrStrtEnSw	A52.J1:9	3.2
					I_HazardSw	A36.JB:4	26.1
					I_HornSw	A41.J1:3	
					I_IgnKeySw	A36.JB:2	3.2
					I_KeylessDrUnl	A41.J1:4	
					I_KeylessEntReq	A41.J1:21	
					I_KeylessIntru	A41.J1:7	32.1
					I_KeylessLockAll	A41.J1:19	
					I_KeylessLuggUnl	A41.J1:18	
					I_LugDorLkSw	A41.J1:17	18.1
					I_LugDorULkSw	A41.J1:20	18.2
					I_RrCutOutSw	A36.JB:21	3.2
					I_RrStrtEnSw	A52.J1:10	3.2
					I_WakeUp	A36.JB:5	38.1
A41.J1:30	O_ConvrNeutral	Converter neutral signal	32.1	CC2:3, CC2:3, FREE:FREE	I_NeutralSe	A50.J1:11	3.2
A42.J1:11	O_ConvIgnition	Converter ignition signal		CC2:5, FREE:FREE, CC2:5	I_IgnKeySw	A36.JB:2	3.2
A42.J1:12	O_ConvEngRun	Converter engine run signal	32.1	CC2:6, FREE:FREE, CC2:6	B_EngineRun	.	
					B_OneAltCharging	.	
A43.J1:12	O_CruCtrlSet	Cruise Control Set Volvo	41.1	A81A.JA:1	D_Stw_Sw7	.	
					D_Stw_Sw8	.	
					I_LwWipIntSw	A42.J1:8	34.1
					I_LwWshSw	A46.J1:9	34.1
A43.J1:13	O_HornSol	Electric Horn	9.1	L1:2	I_AccKeySw	A36.JB:6	3.2
					I_EntDrUnlockSw	A41.J1:8	
					I_FireExt1stAl	A36.JB:23	38.1
					I_FireExt2ndAlm	A44.J1:10	38.1
					I_FireSensorA36	A41.J1:10	22.1
					I_FrStrtEnSw	A52.J1:9	3.2
					I_HazardSw	A36.JB:4	26.1
					I_HornSelectSw	A43.J1:7	9.1
					I_HornSw	A41.J1:3	
					I_IgnKeySw	A36.JB:2	3.2
					I_KeylessDrUnl	A41.J1:4	
					I_KeylessIntru	A41.J1:7	32.1
					I_KeylessLockAll	A41.J1:19	
					I_KeylessLuggUnl	A41.J1:18	
					I_KeylessPanic	A41.J1:6	32.1

MULTIPLEX OUTPUT LIST

O_xx... = Physical Ouput Pin ; I_xx... = Physical Input Pin ; D_xx... = CAN Network Signal from the HVAC control Head ; B_xx.. = Multiplex system global Network Variable

Module.Pin#	Signal name		Page	Connected devices	Input involved		
A43.J1:13	O_HornSol	Electric Horn	9.1	L1:2	I_LugDorLkSw	A41.J1:17	18.1
					I_RrCutOutSw	A36.JB:21	3.2
					I_RrStrtEnSw	A52.J1:10	3.2
					I_WakeUp	A36.JB:5	38.1
A43.J1:14	O_CruCtrlRsm	Cruise Control Resume Volvo	41.1	A81A.JA:2	D_Stw_Sw7	.	
					D_Stw_Sw8	.	
					I_LwWipIntSw	A42.J1:8	34.1
					I_LwWshSw	A46.J1:9	34.1
A43.J1:15	O_Alt	Alternator	10.1	A14A.C:7	B_EngineRun	.	
					B_OneAltCharging	.	
					D_BatStaB6_7LSB	.	
					D_BatStaB6_7MSB	.	
					D_I12LSB	.	
					D_I12MSB	.	
					D_I24LSB	.	
					D_I24MSB	.	
					D_IndexByte	.	
					D_V12LSB	.	
					D_V12MSB	.	
					D_V24LSB	.	
					D_V24MSB	.	
					I_Alt1Voltage	A49.J1:8	3.2
					I_BatMonMod47	A47.J1:24	6.1
					I_BatMonMod51	A51.J1:24	
					I_IgnKeySw	A36.JB:2	3.2
					I_ParkBrSe	A36.JB:9	12.1
A43.J1:16	O_BrkRedCompat	Brake Redundant Compatible	41.1	A81A.JA:5	D_Stw_Sw9	.	
					I_BrkLtSeFrSig	A36.JB:13	12.1
					I_BrkLtSeRrSig	A51.J1:10	12.1
					I_IgnKeySw	A36.JB:2	3.2
					I_LwWipIntSw	A42.J1:8	34.1
					I_LwWshSw	A46.J1:9	34.1
					I_RetdrSig	A50.J1:12	12.1
A44.J1:1	O_DashTrapPMo	Dash Trap Motor	18.1	Mo3:1	D_AirFlapBit0	.	
					D_AirFlapBit1	.	
					D_AirFlapBit2	.	
					I_IgnKeySw	A36.JB:2	3.2
A44.J1:2	O_DashTrapNMo	Dash Trap Motor Return	18.1	Mo3:3	D_AirFlapBit0	.	
					D_AirFlapBit1	.	
					D_AirFlapBit2	.	
					I_IgnKeySw	A36.JB:2	3.2
A44.J1:20	O_BackUpMon	Backup Monitor Signal	28.1	MONITOR:1	I_BackUpCamSw	A55.J1:17	
A44.J1:4	O_LHFogLb2	Left Hand Fog Light Bulb	26.3	L95B:1	B_BatterySaver	.	

MULTIPLEX OUTPUT LIST

O_xx... = Physical Ouput Pin ; I_xx... = Physical Input Pin ; D_xx... = CAN Network Signal from the HVAC control Head ; B_xx.. = Multiplex system global Network Variable

Module.Pin#	Signal name		Page	Connected devices	Input involved		
A44.J1:4	O_LHFogLb2	Left Hand Fog Light Bulb	26.3	L95B:1	B_EngineRun	.	
					B_OneAltCharging	.	
					B_TstModExtLight	.	
					I_BatMonMod45	A45.J1:24	6.1
					I_FogLightSw	A55.J1:6	26.3
					I_HdLtHiLowBmSw	A43.J1:8	26.1
					I_HdLtPos2SwLH	A45.J1:12	26.1
A44.J1:6	O_KeylessPwr			A31.A:25	I_IgnKeySw	A36.JB:2	3.2
					I_LugDorLkSw	A41.J1:17	18.1
A44.J1:7	O_DashBackLit	Dash BackLighting	19.1	Pot1.C:1	I_HdLtPos1Sw	A43.J1:4	26.1
A44.J1:8	O_FrClearLb	Front Clearance Lights Bulb	26.1		B_BatterySaver	.	
					B_EngineRun	.	
					B_OneAltCharging	.	
					B_TstModExtLight	.	
					I_BlinkSw	A43.J1:20	
					I_FogLightSw	A55.J1:6	26.3
					I_HdLtPos1Sw	A43.J1:4	26.1
					I_HdLtPos2SwLH	A45.J1:12	26.1
A45.J1:1	O_FootTrpPSol	Foot Trap Solenoid	18.1	Mo4:A	D_AirFlapBit0	.	
					D_AirFlapBit1	.	
					D_AirFlapBit2	.	
					I_IgnKeySw	A36.JB:2	3.2
A45.J1:2	O_FootTrpNSol	Foot Trap Solenoid	18.1	Mo4:B	D_AirFlapBit0	.	
					D_AirFlapBit1	.	
					D_AirFlapBit2	.	
					I_IgnKeySw	A36.JB:2	3.2
A45.J1:20	O_HornElectric	Horn Electric	9.1		I_AccKeySw	A36.JB:6	3.2
					I_EntDrUnlockSw	A41.J1:8	
					I_FireExt1stAl	A36.JB:23	38.1
					I_FireExt2ndAlm	A44.J1:10	38.1
					I_FireSensorA36	A41.J1:10	22.1
					I_FrStrtEnSw	A52.J1:9	3.2
					I_HazardSw	A36.JB:4	26.1
					I_HornSelectSw	A43.J1:7	9.1
					I_HornSw	A41.J1:3	
					I_IgnKeySw	A36.JB:2	3.2
					I_KeylessDrUnl	A41.J1:4	
					I_KeylessIntru	A41.J1:7	32.1
					I_KeylessLockAll	A41.J1:19	
					I_KeylessLuggUnl	A41.J1:18	
					I_KeylessPanic	A41.J1:6	32.1
					I_LugDorLkSw	A41.J1:17	18.1
					I_RrCutOutSw	A36.JB:21	3.2

MULTIPLEX OUTPUT LIST

O_xx... = Physical Ouput Pin ; I_xx... = Physical Input Pin ; D_xx... = CAN Network Signal from the HVAC control Head ; B_xx.. = Multiplex system global Network Variable

Module.Pin#	Signal name		Page	Connected devices	Input involved		
A45.J1:20	O_HornElectric	Horn Electric	9.1		I_RrStrtEnSw	A52.J1:10	3.2
					I_WakeUp	A36.JB:5	38.1
A45.J1:21	O_LHFrMkrLb	Left Hand Front Markers Light Bulb	26.1	L65:1	B_BatterySaver	.	
					B_EngineRun	.	
					B_OneAltCharging	.	
					B_TstModExtLight	.	
					I_BlinkSw	A43.J1:20	
					I_EntDrUnlockSw	A41.J1:8	
					I_FogLightSw	A55.J1:6	26.3
					I_FrStrtEnSw	A52.J1:9	3.2
					I_HazardSw	A36.JB:4	26.1
					I_HdLtPos1Sw	A43.J1:4	26.1
					I_HdLtPos2SwLH	A45.J1:12	26.1
					I_IgnKeySw	A36.JB:2	3.2
					I_KeylessDrUnl	A41.J1:4	
					I_KeylessIntru	A41.J1:7	32.1
					I_KeylessPanic	A41.J1:6	32.1
					I_RrCutOutSw	A36.JB:21	3.2
					I_RrStrtEnSw	A52.J1:10	3.2
					I_WakeUp	A36.JB:5	38.1
A45.J1:3	O_LeftFrFlshPH		26.1		B_BatterySaver	.	
					B_EngineRun	.	
					B_OneAltCharging	.	
					B_TstModExtLight	.	
					I_HazardSw	A36.JB:4	26.1
					I_LHFlshSw	A45.J1:9	26.1
					I_LHFlshSwRrSig	A51.J1:9	26.2
					I_RHFlshSwRrSig	A51.J1:12	26.2
A45.J1:4	O_LHFogLb1	Left Hand Fog Light Bulb	26.3	L95A:1	B_BatterySaver	.	
					B_EngineRun	.	
					B_OneAltCharging	.	
					B_TstModExtLight	.	
					I_BatMonMod45	A45.J1:24	6.1
					I_FogLightSw	A55.J1:6	26.3
					I_HdLtHiLowBmSw	A43.J1:8	26.1
					I_HdLtPos2SwLH	A45.J1:12	26.1
A45.J1:5	O_LHCornerLb	Left Hand Cornering Light Bulb	26.3	L97.A:1	B_BatterySaver	.	
					B_EngineRun	.	
					B_OneAltCharging	.	
					B_TstModExtLight	.	
					I_CorneringLtSw	A55.J1:8	26.3
					I_DockingLtSw	A55.J1:7	26.3
					I_LHFlshSw	A45.J1:9	26.1

MULTIPLEX OUTPUT LIST

O_xx... = Physical Ouput Pin ; I_xx... = Physical Input Pin ; D_xx... = CAN Network Signal from the HVAC control Head ; B_xx.. = Multiplex system global Network Variable

Module.Pin#	Signal name		Page	Connected devices	Input involved		
A45.J1:5	O_LHCornerLb	Left Hand Cornering Light Bulb	26.3	L97.A:1	I_LowDockLtsSw	A55.J1:9	
A45.J1:6	O_LHHiBmLb	Left Hand Hi Beam Light Bulb	26.1		B_BatterySaver	.	
					B_EngineRun	.	
					B_OneAltCharging	.	
					B_TstModExtLight	.	
					I_BatMonMod45	A45.J1:24	6.1
					I_HdLtHiLowBmSw	A43.J1:8	26.1
					I_HdLtPos2SwLH	A45.J1:12	26.1
A45.J1:7	O_LHLwBmLb	Left Hand Low Beam Light Bulb	26.1		B_BatterySaver	.	
					B_EngineRun	.	
					B_OneAltCharging	.	
					B_TstModExtLight	.	
					I_BatMonMod45	A45.J1:24	6.1
					I_HdLtHiLowBmSw	A43.J1:8	26.1
					I_HdLtPos2SwLH	A45.J1:12	26.1
A45.J1:8	O_LHFrSidFlshLb		26.1	L66:1	B_BatterySaver	.	
					B_EngineRun	.	
					B_OneAltCharging	.	
					B_TstModExtLight	.	
					I_HazardSw	A36.JB:4	26.1
					I_LHFlshSw	A45.J1:9	26.1
					I_LHFlshSwRrSig	A51.J1:9	26.2
					I_RHFlshSwRrSig	A51.J1:12	26.2
A46.J1:1	O_AuxFanSpeed	Auxiliary fan speed control		A32.A:D	B_BatterySaver	.	
					B_EngineRun	.	
					B_OneAltCharging	.	
					D_AuxFanSpdBit0	.	
					D_AuxFanSpdBit1	.	
					D_AuxFanSpdBit2	.	
					D_AuxFnOnOffSw	.	
					I_BatMonMod46	A46.J1:24	6.1
					I_IgnKeySw	A36.JB:2	3.2
A46.J1:2	O_UpWiperMot	Upper Wiper Motor	34.1	R24:85	B_BatterySaver	.	
					B_EngineRun	.	
					B_OneAltCharging	.	
					I_UpWipIntSw	A55.J1:20	34.1
					I_UpWipSw	A55.J1:21	34.1
					I_UpWshSw	A55.J1:18	34.1
A46.J1:20	O_UdrFlrLb	Under Floor Light Bulb	25.1		B_BatterySaver	.	
					B_EngineRun	.	
					B_OneAltCharging	.	
					I_AccKeySw	A36.JB:6	3.2
					I_IgnKeySw	A36.JB:2	3.2

MULTIPLEX OUTPUT LIST

O_xx... = Physical Ouput Pin ; I_xx... = Physical Input Pin ; D_xx... = CAN Network Signal from the HVAC control Head ; B_xx.. = Multiplex system global Network Variable

Module.Pin#	Signal name		Page	Connected devices	Input involved		
A46.J1:21	O_HeadLmpWsh		34.1	Mo54:2	I_HeadLmpWshSw	A55.J1:19	34.1
A46.J1:3	O_LwWshPmp	Lower Wiper Washer Pump	34.1		B_BatterySaver	.	
					B_EngineRun	.	
					B_OneAltCharging	.	
					I_LwWshSw	A46.J1:9	34.1
A46.J1:4	O_UpWshPmp	Upper Wiper Washer Pump	34.1	Mo18:1	B_BatterySaver	.	
					B_EngineRun	.	
					B_OneAltCharging	.	
					I_UpWshSw	A55.J1:18	34.1
A46.J1:5	O_DrvRfgSol	Driver refrigerent solenoid	18.1	D2.A:1	B_BatterySaver	.	
					B_EngineRun	.	
					B_LowVoltage	.	
					B_OneAltCharging	.	
					B_TstModHvac	.	
					B_TstModSAC	.	
					D_AmbTempLSB	.	
					D_AmbTempMSB	.	
					D_OnOffDrvSw	.	
					I_AcPresHiSSe	A52.J1:13	18.2
					I_AcPresLoSSe	A52.J1:14	18.2
A46.J1:6	O_DrvHeatSol	Driver Heat Solenoid	18.1	So8:1	B_BatterySaver	.	
					B_EngineRun	.	
					B_LowVoltage	.	
					B_OneAltCharging	.	
					B_TestMode	.	
					B_TstModHvac	.	
					B_TstModSAC	.	
					D_AirFlapBit0	.	
					D_AirFlapBit1	.	
					D_AirFlapBit2	.	
					D_AmbTempLSB	.	
					D_AmbTempMSB	.	
					D_AuxFanSpdBit0	.	
					D_AuxFanSpdBit1	.	
					D_AuxFanSpdBit2	.	
					D_DriverSetPts	.	
					D_DrvFnSpdBit0	.	
					D_DrvFnSpdBit1	.	
					D_DrvFnSpdBit2	.	
					D_HvacPump	.	
					D_OnOffDrvSw	.	
					D_OnOffPassSw	.	
					D_PassSetPts	.	

MULTIPLEX OUTPUT LIST

O_xx... = Physical Ouput Pin ; I_xx... = Physical Input Pin ; D_xx... = CAN Network Signal from the HVAC control Head ; B_xx.. = Multiplex system global Network Variable

Module.Pin#	Signal name		Page	Connected devices	Input involved		
A46.J1:6	O_DrvHeatSol	Driver Heat Solenoid	18.1	So8:1	I_BatMonMod46	A46.J1:24	6.1
					I_BatMonMod54	A54.J1:24	6.1
					I_DefrostHighSw	A47.J1:10	29.1
					I_DefrostLowSw	A47.J1:12	29.1
					I_DrvTempSe	A55.J1:1	18.1
					I_FireExt1stAl	A36.JB:23	38.1
					I_FireExt2ndAlm	A44.J1:10	38.1
					I_FireSensorA36	A41.J1:10	22.1
A46.J1:8	O_AuxSolValve	Auxiliary refrigerant solenoid valve		So38:A	B_BatterySaver	.	
					B_EngineRun	.	
					B_OneAltCharging	.	
					B_TstModSAC	.	
					D_AuxFnOnOffSw	.	
					I_AcPresHiSSe	A52.J1:13	18.2
					I_AcPresLoSSe	A52.J1:14	18.2
A47.J1:1	O_DrvDefFanMo	Driver Defroster Fan Motor	18.1	A24.B:B	B_BatterySaver	.	
					B_EngineRun	.	
					B_LowVoltage	.	
					B_OneAltCharging	.	
					D_DrvFnSpdBit0	.	
					D_DrvFnSpdBit1	.	
					D_DrvFnSpdBit2	.	
					D_OnOffDrvSw	.	
					I_IgnKeySw	A36.JB:2	3.2
A47.J1:2	O_DrvRecTrap	Driver Recycle Trap	18.1	L203:A	B_BatterySaver	.	
					B_EngineRun	.	
					B_OneAltCharging	.	
					B_TstModHvac	.	
					B_TstModSAC	.	
					D_RecSw	.	
A47.J1:20	O_AuxWaterPump	Auxiliary water pump	18.1		B_BatterySaver	.	
					B_EngineRun	.	
					B_OneAltCharging	.	
					B_TstModSAC	.	
					D_AmbTempLSB	.	
					D_AmbTempMSB	.	
					D_AuxFanSpdBit0	.	
					D_AuxFanSpdBit1	.	
					D_AuxFanSpdBit2	.	
					D_DrvFnSpdBit0	.	
					D_DrvFnSpdBit1	.	
					D_DrvFnSpdBit2	.	
					D_HvacPump	.	

MULTIPLEX OUTPUT LIST

O_xx... = Physical Ouput Pin ; I_xx... = Physical Input Pin ; D_xx... = CAN Network Signal from the HVAC control Head ; B_xx.. = Multiplex system global Network Variable

Module.Pin#	Signal name		Page	Connected devices	Input involved		
A47.J1:20	O_AuxWaterPump	Auxiliary water pump	18.1		D_OnOffDrvSw	.	
					D_StopTestMode	.	
					I_DefrostHighSw	A47.J1:10	29.1
					I_DefrostLowSw	A47.J1:12	29.1
					I_IgnKeySw	A36.JB:2	3.2
A47.J1:3	O_LwWipSpd1	Lower Wiper Speed 1	34.1	R23:86	B_BatterySaver	.	
					B_EngineRun	.	
					B_OneAltCharging	.	
					I_LwWipIntSw	A42.J1:8	34.1
					I_LwWshSw	A46.J1:9	34.1
A47.J1:5	O_EntDorStpLb	Entrance Door Step Light Bulb	29.1		I_AccKeySw	A36.JB:6	3.2
					I_EntDorOpSe	A41.J1:5	
					I_EntDrUnlockSw	A41.J1:8	
					I_FrStrtEnSw	A52.J1:9	3.2
					I_HazardSw	A36.JB:4	26.1
					I_IgnKeySw	A36.JB:2	3.2
					I_KeylessDrUnl	A41.J1:4	
					I_KeylessLuggUnl	A41.J1:18	
					I_LugDorLkSw	A41.J1:17	18.1
					I_RrCutOutSw	A36.JB:21	3.2
					I_RrStrtEnSw	A52.J1:10	3.2
					I_WakeUp	A36.JB:5	38.1
A47.J1:6	O_DriverLtLb	Driver Light Bulb	29.1		B_BatterySaver	.	
					B_EngineRun	.	
					B_OneAltCharging	.	
					I_DrvLtSw	A41.J1:2	
A47.J1:7	O_RHDefrostFan	Passenger defrost fan speed control	29.1	A30.A:D	B_BatterySaver	.	
					B_EngineRun	.	
					B_LowVoltage	.	
					B_OneAltCharging	.	
					D_DrvFnSpdBit0	.	
					D_DrvFnSpdBit1	.	
					D_DrvFnSpdBit2	.	
					D_OnOffDrvSw	.	
					I_DefrostHighSw	A47.J1:10	29.1
					I_DefrostLowSw	A47.J1:12	29.1
					I_IgnKeySw	A36.JB:2	3.2
A47.J1:8	O_EntDorLtLb	Entrance Door Light Bulb	29.1	L17:1	B_BatterySaver	.	
					B_EngineRun	.	
					B_OneAltCharging	.	
					I_DrvLtSw	A41.J1:2	
					I_EntDorOpSe	A41.J1:5	
					I_EntDrUnlockSw	A41.J1:8	

MULTIPLEX OUTPUT LIST

O_xx... = Physical Ouput Pin ; I_xx... = Physical Input Pin ; D_xx... = CAN Network Signal from the HVAC control Head ; B_xx.. = Multiplex system global Network Variable

Module.Pin#	Signal name		Page	Connected devices	Input involved		
A47.J1:8	O_EntDorLtLb	Entrance Door Light Bulb	29.1	L17:1	I_FrStrtEnSw	A52.J1:9	3.2
					I_HazardSw	A36.JB:4	26.1
					I_KeylessDrUnl	A41.J1:4	
					I_KeylessLuggUnl	A41.J1:18	
					I_LugDorLkSw	A41.J1:17	18.1
					I_RrCutOutSw	A36.JB:21	3.2
					I_RrStrtEnSw	A52.J1:10	3.2
					I_WakeUp	A36.JB:5	38.1
A48.J1:20	O_RHFrSidFlshLb	RH Front Side Flasher L-Bulb	26.1	L64:1	B_BatterySaver	.	
					B_EngineRun	.	
					B_OneAltCharging	.	
					B_TstModExtLight	.	
					I_HazardSw	A36.JB:4	26.1
					I_LHFlshSwRrSig	A51.J1:9	26.2
					I_RHFlshSw	A48.J1:12	26.1
					I_RHFlshSwRrSig	A51.J1:12	26.2
A48.J1:21	O_RHFrMrkLb	Right Hand Front Markers Light Bulb		L63:1	B_BatterySaver	.	
					B_EngineRun	.	
					B_OneAltCharging	.	
					B_TstModExtLight	.	
					I_BlinkSw	A43.J1:20	
					I_EntDrUnlockSw	A41.J1:8	
					I_FogLightSw	A55.J1:6	26.3
					I_FrStrtEnSw	A52.J1:9	3.2
					I_HazardSw	A36.JB:4	26.1
					I_HdLtPos1Sw	A43.J1:4	26.1
					I_HdLtPos2SwLH	A45.J1:12	26.1
					I_KeylessDrUnl	A41.J1:4	
					I_KeylessIntru	A41.J1:7	32.1
					I_KeylessPanic	A41.J1:6	32.1
					I_RrCutOutSw	A36.JB:21	3.2
					I_RrStrtEnSw	A52.J1:10	3.2
					I_WakeUp	A36.JB:5	38.1
A48.J1:3	O_RHHiBeamLb	Right Hand Hi Beam Light Bulb	26.1	L302:C	B_BatterySaver	.	
					B_EngineRun	.	
					B_OneAltCharging	.	
					B_TstModExtLight	.	
					I_BatMonMod48	A48.J1:24	6.1
					I_HdLtHiLowBmSw	A43.J1:8	26.1
					I_HdLtPos2SwLH	A45.J1:12	26.1
A48.J1:4	O_RHLwBeamLb	Right Hand Low Beam Light Bulb	26.1	L302:E	B_BatterySaver	.	
					B_EngineRun	.	
					B_OneAltCharging	.	

MULTIPLEX OUTPUT LIST

O_xx... = Physical Ouput Pin ; I_xx... = Physical Input Pin ; D_xx... = CAN Network Signal from the HVAC control Head ; B_xx.. = Multiplex system global Network Variable

Module.Pin#	Signal name		Page	Connected devices	Input involved		
A48.J1:4	O_RHLwBeamLb	Right Hand Low Beam Light Bulb	26.1	L302:E	B_TstModExtLight	.	
					I_BatMonMod48	A48.J1:24	6.1
					I_HdLtHiLowBmSw	A43.J1:8	26.1
					I_HdLtPos2SwRH	A48.J1:10	26.1
A48.J1:5	O_RHCornerLb	Right Hand Cornering Light Bulb	26.3	L98A.A:1	B_BatterySaver	.	
					B_EngineRun	.	
					B_OneAltCharging	.	
					B_TstModExtLight	.	
					I_CorneringLtSw	A55.J1:8	26.3
					I_DockingLtSw	A55.J1:7	26.3
					I_LowDockLtsSw	A55.J1:9	
					I_RHFlshSw	A48.J1:12	26.1
A48.J1:6	O_RightFrFlshPH		26.1		B_BatterySaver	.	
					B_EngineRun	.	
					B_OneAltCharging	.	
					B_TstModExtLight	.	
					I_HazardSw	A36.JB:4	26.1
					I_LHFlshSwRrSig	A51.J1:9	26.2
					I_RHFlshSw	A48.J1:12	26.1
					I_RHFlshSwRrSig	A51.J1:12	26.2
A48.J1:7	O_RHFogLb2	Right Hand Fog Light	26.1	L96B:1	B_BatterySaver	.	
					B_EngineRun	.	
					B_OneAltCharging	.	
					B_TstModExtLight	.	
					I_BatMonMod48	A48.J1:24	6.1
					I_FogLightSw	A55.J1:6	26.3
					I_HdLtHiLowBmSw	A43.J1:8	26.1
					I_HdLtPos2SwLH	A45.J1:12	26.1
A48.J1:8	O_RHFogLb1	Right Hand Fog Light	26.3	L96A:1	B_BatterySaver	.	
					B_EngineRun	.	
					B_OneAltCharging	.	
					B_TstModExtLight	.	
					I_BatMonMod48	A48.J1:24	6.1
					I_FogLightSw	A55.J1:6	26.3
					I_HdLtHiLowBmSw	A43.J1:8	26.1
					I_HdLtPos2SwLH	A45.J1:12	26.1
A49.J1:14	O_RetardEna	Retarder Enable	12.1		D_Stw_Sw2	.	
					D_Stw_Sw3	.	
					D_Stw_Sw5	.	
					I_RetarderSel	A55.J1:10	12.1
A49.J1:15	O_AltChrCtr	Alternator Charge Control	3.2		B_EngineRun	.	
					B_OneAltCharging	.	
					D_I12LSB	.	

MULTIPLEX OUTPUT LIST

O_xx... = Physical Ouput Pin ; I_xx... = Physical Input Pin ; D_xx... = CAN Network Signal from the HVAC control Head ; B_xx.. = Multiplex system global Network Variable

Module.Pin#	Signal name		Page	Connected devices	Input involved		
A49.J1:15	O_AltChrCtr	Alternator Charge Control	3.2		D_I12MSB	.	
					D_I24LSB	.	
					D_I24MSB	.	
					D_V12LSB	.	
					D_V12MSB	.	
					D_V24LSB	.	
					D_V24MSB	.	
					I_BatMonMod47	A47.J1:24	6.1
					I_BatMonMod51	A51.J1:24	
					I_IgnKeySw	A36.JB:2	3.2
A50.J1:1	O_BackUpCam	Back up camera	36.1		I_BackUpCamSw	A55.J1:17	
A50.J1:2	O_TransInhibit	Transmission Inhibit	15.1		I_BrkLtSeFrSig	A36.JB:13	12.1
					I_BrkLtSeRrSig	A51.J1:10	12.1
					I_SldO1LimitInSe	A56.J1:11	
					I_SldO2LimitInSe	A57.J1:11	
					I_SldO3LimitInSe	A58.J1:11	
					I_SldO4LimitInSe	A59.J1:11	
A50.J1:20	O_RevLbBuz	Reverse Alarm and Light Bulb	26.2		B_BatterySaver	.	
					B_EngineRun	.	
					B_OneAltCharging	.	
					B_TestSwBuz2	.	
					B_TestSwBuzzer	.	
					B_TstModExtLight	.	
					B_TstModHvac	.	
					B_TstModHvacNext	.	
					B_TstModSAC	.	
					B_TstModSACNext	.	
					B_TstSwBuz3	.	
					I_RrStrtEnSw	A52.J1:10	3.2
A50.J1:21	O_BrLtUpperLb		26.2		B_BatterySaver	.	
					B_EngineRun	.	
					B_OneAltCharging	.	
					B_TstModExtLight	.	
					I_BrkLtSeFrSig	A36.JB:13	12.1
					I_BrkLtSeRrSig	A51.J1:10	12.1
A50.J1:3	O_RevAlarm	Back up alarm	26.3	L187.A:A	B_BatterySaver	.	
					B_EngineRun	.	
					B_OneAltCharging	.	
					B_TestSwBuz2	.	
					B_TestSwBuzzer	.	
					B_TstModExtLight	.	
					B_TstModHvac	.	
					B_TstModHvacNext	.	

MULTIPLEX OUTPUT LIST

O_xx... = Physical Ouput Pin ; I_xx... = Physical Input Pin ; D_xx... = CAN Network Signal from the HVAC control Head ; B_xx.. = Multiplex system global Network Variable

Module.Pin#	Signal name		Page	Connected devices	Input involved		
A50.J1:3	O_RevAlarm	Back up alarm	26.3	L187.A:A	B_TstModSAC	.	
					B_TstModSACNext	.	
					B_TstSwBuz3	.	
					D_NextWheel	.	
					I_RevAlrmSw	A43.J1:6	32.2
					I_RrStrtEnSw	A52.J1:10	3.2
A50.J1:4	O_ReClearLb	Rear Clearance Light Bulb	26.2		B_BatterySaver	.	
					B_EngineRun	.	
					B_OneAltCharging	.	
					B_TstModExtLight	.	
					I_BlinkSw	A43.J1:20	
					I_FogLightSw	A55.J1:6	26.3
					I_HdLtPos1Sw	A43.J1:4	26.1
					I_HdLtPos2SwLH	A45.J1:12	26.1
A50.J1:5	O_LHCtrFlshLb	Water Filter Indicator Warning	26.2	L70.A:1	B_BatterySaver	.	
					B_EngineRun	.	
					B_OneAltCharging	.	
					B_TstModExtLight	.	
					I_HazardSw	A36.JB:4	26.1
					I_LHFlshSwRrSig	A51.J1:9	26.2
					I_RHFlshSwRrSig	A51.J1:12	26.2
A50.J1:6	O_BrLTLowerLed		26.2		B_BatterySaver	.	
					B_EngineRun	.	
					B_OneAltCharging	.	
					B_TstModExtLight	.	
					I_BrkLtSeFrSig	A36.JB:13	12.1
					I_BrkLtSeRrSig	A51.J1:10	12.1
					I_IgnKeySw	A36.JB:2	3.2
					I_RetdrSig	A50.J1:12	12.1
A50.J1:7	O_RHCtrFlshLb	Wheel Chair Lift Warning Indicator	26.2	L68.A:1	B_BatterySaver	.	
					B_EngineRun	.	
					B_OneAltCharging	.	
					B_TstModExtLight	.	
					I_HazardSw	A36.JB:4	26.1
					I_LHFlshSwRrSig	A51.J1:9	26.2
					I_RHFlshSwRrSig	A51.J1:12	26.2
A50.J1:8	O_CtrSdMrkLb	Tag Axle Warning Indicator	26.2		B_BatterySaver	.	
					B_EngineRun	.	
					B_OneAltCharging	.	
					B_TstModExtLight	.	
					I_BlinkSw	A43.J1:20	
					I_FogLightSw	A55.J1:6	26.3
					I_HdLtPos1Sw	A43.J1:4	26.1

MULTIPLEX OUTPUT LIST

O_xx... = Physical Ouput Pin ; I_xx... = Physical Input Pin ; D_xx... = CAN Network Signal from the HVAC control Head ; B_xx.. = Multiplex system global Network Variable

Module.Pin#	Signal name		Page	Connected devices	Input involved		
A50.J1:8	O_CtrSdMrkLb	Tag Axle Warning Indicator	26.2		I_HdLtPos2SwLH	A45.J1:12	26.1
A51.J1:1	O_SerBrkTrans	Servise Brake Signal For Transmission	15.1	A1_1_101:Service_brk	I_BrkLtSeFrSig	A36.JB:13	12.1
A51.J1:21	O_LHReFlshLb	Left Hand Rear Flasher Light Bulb	26.2		B_BatterySaver	.	
					B_EngineRun	.	
					B_OneAltCharging	.	
					B_TstModExtLight	.	
					I_HazardSw	A36.JB:4	26.1
					I_LHFlshSwRrSig	A51.J1:9	26.2
					I_RHFlshSwRrSig	A51.J1:12	26.2
A51.J1:3	O_RHReFlshLb	Right Hand Rear Flasher Light Bulb	26.2		B_BatterySaver	.	
					B_EngineRun	.	
					B_OneAltCharging	.	
					B_TstModExtLight	.	
					I_HazardSw	A36.JB:4	26.1
					I_LHFlshSwRrSig	A51.J1:9	26.2
					I_RHFlshSwRrSig	A51.J1:12	26.2
A51.J1:4	O_LHDockLb	Left Hand Docking Light Bulb	26.3	L93.A:1	B_BatterySaver	.	
					B_EngineRun	.	
					B_OneAltCharging	.	
					B_TstModExtLight	.	
					I_DockingLtSw	A55.J1:7	26.3
					I_LowDockLtsSw	A55.J1:9	
A51.J1:5	O_RHDockLb	Right Hand Docking Light Bulb	26.3	L94.A:1	B_BatterySaver	.	
					B_EngineRun	.	
					B_OneAltCharging	.	
					B_TstModExtLight	.	
					I_DockingLtSw	A55.J1:7	26.3
					I_LowDockLtsSw	A55.J1:9	
A51.J1:6	O_BrLTUpperLed		26.2		B_BatterySaver	.	
					B_EngineRun	.	
					B_OneAltCharging	.	
					B_TstModExtLight	.	
					I_BrkLtSeFrSig	A36.JB:13	12.1
					I_BrkLtSeRrSig	A51.J1:10	12.1
A51.J1:7	O_CyclopeLt	Cyclope Brake Light	26.2	L81A:in	B_BatterySaver	.	
					B_EngineRun	.	
					B_OneAltCharging	.	
					B_TstModExtLight	.	
					I_BrkLtSeFrSig	A36.JB:13	12.1
					I_BrkLtSeRrSig	A51.J1:10	12.1
A52.J1:1	O_EngFanSpd1	Engine Fan Radiator Speed 1	13.1		B_BatterySaver	.	
					B_EngineRun	.	
					B_OneAltCharging	.	

MULTIPLEX OUTPUT LIST

O_xx... = Physical Ouput Pin ; I_xx... = Physical Input Pin ; D_xx... = CAN Network Signal from the HVAC control Head ; B_xx.. = Multiplex system global Network Variable

Module.Pin#	Signal name		Page	Connected devices	Input involved		
A52.J1:1	O_EngFanSpd1	Engine Fan Radiator Speed 1	13.1		B_TstModHvac	.	
					D_RadFanSpd1	.	
					D_StopTestMode	.	
					I_AcPresHiSSe	A52.J1:13	18.2
					I_FireExt1stAl	A36.JB:23	38.1
					I_FireExt2ndAlm	A44.J1:10	38.1
					I_FireSensorA36	A41.J1:10	22.1
					I_FrStrtEnSw	A52.J1:9	3.2
					I_IgnKeySw	A36.JB:2	3.2
					I_RrStrtEnSw	A52.J1:10	3.2
A52.J1:2	O_EngFanSpd2	Engine Fan Radiator Speed 2	13.1		B_BatterySaver	.	
					B_EngineRun	.	
					B_OneAltCharging	.	
					B_TstModHvac	.	
					D_RadFanSpd2	.	
					D_StopTestMode	.	
					I_AcPresHiSSe	A52.J1:13	18.2
					I_FireExt1stAl	A36.JB:23	38.1
					I_FireExt2ndAlm	A44.J1:10	38.1
					I_FireSensorA36	A41.J1:10	22.1
					I_IgnKeySw	A36.JB:2	3.2
A52.J1:21	O_AcUnldRH	Hvac Right Hand Cylinder Unloader	18.2		B_BatterySaver	.	
					B_EngineRun	.	
					B_OneAltCharging	.	
					B_TstModHvac	.	
					D_PassSetPts	.	
					I_AcPresHiSSe	A52.J1:13	18.2
					I_AcPresLoSSe	A52.J1:14	18.2
A52.J1:3	O_RJBDoFanMo	Rear junction box door fan		Mo53:1	B_BatterySaver	.	
					B_EngineRun	.	
					B_OneAltCharging	.	
					B_TstModHvac	.	
					B_TstModSAC	.	
					D_AmbTempLSB	.	
					D_AmbTempMSB	.	
					I_FireExt1stAl	A36.JB:23	38.1
					I_FireExt2ndAlm	A44.J1:10	38.1
					I_FireSensorA36	A41.J1:10	22.1
					I_IgnKeySw	A36.JB:2	3.2
					I_RJBLtSw	A49.J1:17	
A52.J1:4	O_DiffLockSol	Differential lock solenoid	11.1	Shrk150	I_DiffLockSw	A43.J1:9	
A52.J1:5	O_EngCmptLb	Engine Compartiment Light Bulb	25.1		B_BatterySaver	.	
					B_EngineRun	.	

MULTIPLEX OUTPUT LIST

O_xx... = Physical Ouput Pin ; I_xx... = Physical Input Pin ; D_xx... = CAN Network Signal from the HVAC control Head ; B_xx.. = Multiplex system global Network Variable

Module.Pin#	Signal name		Page	Connected devices	Input involved		
A52.J1:5	O_EngCmptLb	Engine Compartiment Light Bulb	25.1		B_OneAltCharging	.	
					I_EngDoorSe	A52.J1:12	
A52.J1:6	O_StarterRel	Starter Relay	3.2		B_BatterySaver	.	
					B_EngineRun	.	
					B_OneAltCharging	.	
					B_TstModHvac	.	
					B_TstModSAC	.	
					I_AccKeySw	A36.JB:6	3.2
					I_EntDrUnlockSw	A41.J1:8	
					I_FrStrtEnSw	A52.J1:9	3.2
					I_HazardSw	A36.JB:4	26.1
					I_IgnKeySw	A36.JB:2	3.2
					I_KeylessDrUnl	A41.J1:4	
					I_KeylessIntru	A41.J1:7	32.1
					I_NeutralSe	A50.J1:11	3.2
					I_RrCutOutSw	A36.JB:21	3.2
					I_RrStrtEnSw	A52.J1:10	3.2
					I_WakeUp	A36.JB:5	38.1
A54.J1:1	O_CndSpd2Rel	Condensor Fan Speed 2 Relay	18.2		B_BatterySaver	.	
					B_EngineRun	.	
					B_LowVoltage	.	
					B_OneAltCharging	.	
					B_TstModHvac	.	
					D_AmbTempLSB	.	
					D_AmbTempMSB	.	
					D_DriverSetPts	.	
					D_OnOffDrvSw	.	
					D_OnOffPassSw	.	
					D_PassSetPts	.	
					I_AcPresHiSSe	A52.J1:13	18.2
					I_AcPresLoSSe	A52.J1:14	18.2
					I_CoilTherSe	A47.J1:11	
					I_DrvTempSe	A55.J1:1	18.1
					I_FireExt1stAl	A36.JB:23	38.1
					I_FireExt2ndAlm	A44.J1:10	38.1
					I_FireSensorA36	A41.J1:10	22.1
A54.J1:2	O_EvaSpd2Pilot	Evaporator Fan Speed 2	18.2	TermMo9	B_BatterySaver	.	
					B_EngineRun	.	
					B_LowVoltage	.	
					B_OneAltCharging	.	
					B_TstModHvac	.	
					D_OnOffPassSw	.	
					D_PassSetPts	.	

MULTIPLEX OUTPUT LIST

O_xx... = Physical Ouput Pin ; I_xx... = Physical Input Pin ; D_xx... = CAN Network Signal from the HVAC control Head ; B_xx.. = Multiplex system global Network Variable

Module.Pin#	Signal name		Page	Connected devices	Input involved		
A54.J1:2	O_EvaSpd2Pilot	Evaporator Fan Speed 2	18.2	TermMo9	I_AcPresHiSSe	A52.J1:13	18.2
					I_AcPresLoSSe	A52.J1:14	18.2
					I_BatMonMod54	A54.J1:24	6.1
					I_FireExt1stAl	A36.JB:23	38.1
					I_FireExt2ndAlm	A44.J1:10	38.1
					I_FireSensorA36	A41.J1:10	22.1
					I_IgnKeySw	A36.JB:2	3.2
					I_SwitchOption	A42.J1:20	
					I_SwitchOption2	A42.J1:21	
A54.J1:20	O_ACRecPass	A/C Pass. Gaz Cylinder Recycle	18.2	L205:1	B_BatterySaver	.	
					B_EngineRun	.	
					B_OneAltCharging	.	
					B_TstModHvac	.	
					B_TstModSAC	.	
					D_RecSw	.	
A54.J1:3	O_PasRfgSol	Passenger Refrigerent Solenoid	18.2	D11.A:1	B_BatterySaver	.	
					B_EngineRun	.	
					B_LowVoltage	.	
					B_OneAltCharging	.	
					B_TstModHvac	.	
					D_AmbTempLSB	.	
					D_AmbTempMSB	.	
					D_DriverSetPts	.	
					D_OnOffDrvSw	.	
					D_OnOffPassSw	.	
					D_PassSetPts	.	
					I_BatMonMod54	A54.J1:24	6.1
					I_CoilTherSe	A47.J1:11	
					I_DrvTempSe	A55.J1:1	18.1
					I_FireExt1stAl	A36.JB:23	38.1
					I_FireExt2ndAlm	A44.J1:10	38.1
					I_FireSensorA36	A41.J1:10	22.1
A54.J1:4	O_ACWaterPmp	Hvac Water Pump	18.2		B_BatterySaver	.	
					B_EngineRun	.	
					B_OneAltCharging	.	
					B_TestMode	.	
					B_TstModHvac	.	
					D_AmbTempLSB	.	
					D_AmbTempMSB	.	
					D_DrvFnSpdBit0	.	
					D_DrvFnSpdBit1	.	
					D_DrvFnSpdBit2	.	
					D_HvacPump	.	

MULTIPLEX OUTPUT LIST

O_xx... = Physical Ouput Pin ; I_xx... = Physical Input Pin ; D_xx... = CAN Network Signal from the HVAC control Head ; B_xx.. = Multiplex system global Network Variable

Module.Pin#	Signal name		Page	Connected devices	Input involved		
A54.J1:4	O_ACWaterPmp	Hvac Water Pump	18.2		D_OnOffPassSw	.	
					D_PassSetPts	.	
					D_StopTestMode	.	
					I_BatMonMod54	A54.J1:24	6.1
					I_FireExt1stAl	A36.JB:23	38.1
					I_FireExt2ndAlm	A44.J1:10	38.1
					I_FireSensorA36	A41.J1:10	22.1
					I_IgnKeySw	A36.JB:2	3.2
A54.J1:5	O_CndSpd1Rel	Condensor Fan Speed 1 Relay	18.2	R10:2	B_BatterySaver	.	
					B_EngineRun	.	
					B_LowVoltage	.	
					B_OneAltCharging	.	
					B_TstModHvac	.	
					D_AmbTempLSB	.	
					D_AmbTempMSB	.	
					D_DriverSetPts	.	
					D_OnOffDrvSw	.	
					D_OnOffPassSw	.	
					D_PassSetPts	.	
					I_AcPresHiSSe	A52.J1:13	18.2
					I_AcPresLoSSe	A52.J1:14	18.2
					I_BatMonMod54	A54.J1:24	6.1
					I_CoilTherSe	A47.J1:11	
					I_DrvTempSe	A55.J1:1	18.1
					I_FireExt1stAl	A36.JB:23	38.1
					I_FireExt2ndAlm	A44.J1:10	38.1
					I_FireSensorA36	A41.J1:10	22.1
A54.J1:7	O_EvaSpd1Rel	Evaporator Fan Speed 1 Relay	18.2	R12:2	B_BatterySaver	.	
					B_EngineRun	.	
					B_LowVoltage	.	
					B_OneAltCharging	.	
					B_TstModHvac	.	
					D_OnOffPassSw	.	
					I_BatMonMod54	A54.J1:24	6.1
					I_FireExt1stAl	A36.JB:23	38.1
					I_FireExt2ndAlm	A44.J1:10	38.1
					I_FireSensorA36	A41.J1:10	22.1
A54.J1:8	O_PasHeatSol	Passenger Heat Solenoid Valve	18.2	So13:1	B_BatterySaver	.	
					B_EngineRun	.	
					B_OneAltCharging	.	
					B_TestMode	.	
					B_TstModHvac	.	
					B_TstModSAC	.	

MULTIPLEX OUTPUT LIST

O_xx... = Physical Ouput Pin ; I_xx... = Physical Input Pin ; D_xx... = CAN Network Signal from the HVAC control Head ; B_xx.. = Multiplex system global Network Variable

Module.Pin#	Signal name		Page	Connected devices	Input involved		
A54.J1:8	O_PasHeatSol	Passenger Heat Solenoid Valve	18.2	So13:1	D_AmbTempLSB	.	
					D_AmbTempMSB	.	
					D_AuxFanSpdBit0	.	
					D_AuxFanSpdBit1	.	
					D_AuxFanSpdBit2	.	
					D_DrvFnSpdBit0	.	
					D_DrvFnSpdBit1	.	
					D_DrvFnSpdBit2	.	
					D_HvacPump	.	
					D_OnOffDrvSw	.	
					D_OnOffPassSw	.	
					D_PassSetPts	.	
					I_BatMonMod54	A54.J1:24	6.1
					I_DefrostHighSw	A47.J1:10	29.1
					I_DefrostLowSw	A47.J1:12	29.1
					I_FireExt1stAl	A36.JB:23	38.1
					I_FireExt2ndAlm	A44.J1:10	38.1
					I_FireSensorA36	A41.J1:10	22.1
A55.J1:11	O_SunVisorDrv	Sun Visor Driver	41.1	R43:86	D_Stw_Sw10	.	
					D_Stw_Sw4	.	
A55.J1:12	O_JacobBrk1	Jacob Brake 1	41.1		D_Stw_Sw2	.	
					D_Stw_Sw3	.	
					D_Stw_Sw5	.	
					I_RetarderSel	A55.J1:10	12.1
A55.J1:13	O_SunVisorPass	Sun Visor Driver	41.1	R42:86	D_Stw_Sw10	.	
					D_Stw_Sw4	.	
A55.J1:14	O_JacobBrk2	Jacob Brake 2	41.1		D_Stw_Sw2	.	
					D_Stw_Sw3	.	
					D_Stw_Sw5	.	
					I_RetarderSel	A55.J1:10	12.1
A55.J1:15	O_ACCTimeGapInc		14.1	A81A.JA:17	D_Stw_Sw7	.	
					D_Stw_Sw8	.	
A55.J1:16	O_ACCTimeGapDec		14.1	A81A.JB:7	D_Stw_Sw7	.	
					D_Stw_Sw8	.	
A55.J1:30	O_SunVUpDw		41.1	R41:86	D_Stw_Sw10	.	
					D_Stw_Sw4	.	
A56.J1:1	O_SldO1MoSpeedA	Slide-Out 1 Motor Speed Control A			I_BatMonMod56	A56.J1:24	
					I_SldO1CloseSw	A56.J1:10	
					I_SldO1LimiOutSw	A56.J1:14	
					I_SldO1LimitInSe	A56.J1:11	
					I_SldO1OpenSw	A56.J1:9	
					I_SldO1PBrakeSw	A56.J1:12	
					I_SldO1VacPrSe	A56.J1:13	

MULTIPLEX OUTPUT LIST

O_xx... = Physical Ouput Pin ; I_xx... = Physical Input Pin ; D_xx... = CAN Network Signal from the HVAC control Head ; B_xx.. = Multiplex system global Network Variable

Module.Pin#	Signal name		Page	Connected devices	Input involved		
A56.J1:2	O_SldO1MoSpeedB	Slide-Out 1 Motor Speed Control B			I_BatMonMod56	A56.J1:24	
					I_SldO1CloseSw	A56.J1:10	
					I_SldO1LimiOutSw	A56.J1:14	
					I_SldO1LimitInSe	A56.J1:11	
					I_SldO1OpenSw	A56.J1:9	
					I_SldO1PBrakeSw	A56.J1:12	
					I_SldO1VacPrSe	A56.J1:13	
A56.J1:20	O_SldO1Motpos	Slide_Out 1 Motor +		RSo1.B:1	I_BatMonMod56	A56.J1:24	
					I_SldO1CloseSw	A56.J1:10	
					I_SldO1LimiOutSw	A56.J1:14	
					I_SldO1LimitInSe	A56.J1:11	
					I_SldO1OpenSw	A56.J1:9	
					I_SldO1PBrakeSw	A56.J1:12	
					I_SldO1VacPrSe	A56.J1:13	
A56.J1:21	O_SldO1SecuPinSo	Slide-Out 1 Security Pins		SOSO4:1	I_SldO1LimitInSe	A56.J1:11	
					I_SldO1PBrakeSw	A56.J1:12	
					I_SldO2LimitInSe	A57.J1:11	
					I_SldO2PBrakeSw	A57.J1:12	
					I_SldO3LimitInSe	A58.J1:11	
					I_SldO3PBrakeSw	A58.J1:12	
					I_SldO4LimitInSe	A59.J1:11	
					I_SldO4PBrakeSw	A59.J1:12	
A56.J1:3	O_SldO1RemoteLed	Slide_Out 1 Remote Led		SwSo1.A:2	I_BatMonMod56	A56.J1:24	
					I_SldO1CloseSw	A56.J1:10	
					I_SldO1LimiOutSw	A56.J1:14	
					I_SldO1LimitInSe	A56.J1:11	
					I_SldO1OpenSw	A56.J1:9	
					I_SldO1PBrakeSw	A56.J1:12	
					I_SldO1Supply5v	A56.J1:15	
					I_SldO1VacPrSe	A56.J1:13	
A56.J1:4	O_SldO1SealInfSo	Slide_Out 1 Seal Inflating Valve		SoSo5:1	I_SldO1CloseSw	A56.J1:10	
					I_SldO1LimiOutSw	A56.J1:14	
					I_SldO1LimitInSe	A56.J1:11	
					I_SldO1OpenSw	A56.J1:9	
A56.J1:5	O_SldO1SealDefSo	Slide_Out 1 Seal Deflating Valve		SoSo1:1	I_BatMonMod56	A56.J1:24	
					I_SldO1CloseSw	A56.J1:10	
					I_SldO1LimiOutSw	A56.J1:14	
					I_SldO1LimitInSe	A56.J1:11	
					I_SldO1OpenSw	A56.J1:9	
					I_SldO1PBrakeSw	A56.J1:12	
A56.J1:6	O_SldO1VaccGenSo	Slide_Out 1 Seal Vaccum Generator		SoSo2:1	I_BatMonMod56	A56.J1:24	
					I_BatMonMod57	A57.J1:24	
					I_BatMonMod58	A58.J1:24	

MULTIPLEX OUTPUT LIST

O_xx... = Physical Ouput Pin ; I_xx... = Physical Input Pin ; D_xx... = CAN Network Signal from the HVAC control Head ; B_xx.. = Multiplex system global Network Variable

Module.Pin#	Signal name		Page	Connected devices	Input involved		
A56.J1:6	O_SldO1VaccGenSo	Slide_Out 1 Seal Vaccum Generator		SoSo2:1	I_BatMonMod59	A59.J1:24	
					I_SldO1CloseSw	A56.J1:10	
					I_SldO1LimiOutSw	A56.J1:14	
					I_SldO1LimitInSe	A56.J1:11	
					I_SldO1OpenSw	A56.J1:9	
					I_SldO1PBrakeSw	A56.J1:12	
					I_SldO2CloseSw	A57.J1:10	
					I_SldO2LimiOutSw	A57.J1:14	
					I_SldO2LimitInSe	A57.J1:11	
					I_SldO2OpenSw	A57.J1:9	
					I_SldO2PBrakeSw	A57.J1:12	
					I_SldO3CloseSw	A58.J1:10	
					I_SldO3LimiOutSw	A58.J1:14	
					I_SldO3LimitInSe	A58.J1:11	
					I_SldO3OpenSw	A58.J1:9	
					I_SldO3PBrakeSw	A58.J1:12	
					I_SldO4CloseSw	A59.J1:10	
					I_SldO4LimiOutSw	A59.J1:14	
					I_SldO4LimitInSe	A59.J1:11	
					I_SldO4OpenSw	A59.J1:9	
					I_SldO4PBrakeSw	A59.J1:12	
A56.J1:7	O_SldO1Motneg	Slide_Out 1 Motor -		RSo2.B:1	I_BatMonMod56	A56.J1:24	
					I_SldO1CloseSw	A56.J1:10	
					I_SldO1LimiOutSw	A56.J1:14	
					I_SldO1LimitInSe	A56.J1:11	
					I_SldO1OpenSw	A56.J1:9	
					I_SldO1PBrakeSw	A56.J1:12	
					I_SldO1VacPrSe	A56.J1:13	
A57.J1:1	O_SldO2MoSpeedA	Slide-Out 2 Motor Speed Control A			I_BatMonMod57	A57.J1:24	
					I_SldO1VacPrSe	A56.J1:13	
					I_SldO2CloseSw	A57.J1:10	
					I_SldO2LimiOutSw	A57.J1:14	
					I_SldO2LimitInSe	A57.J1:11	
					I_SldO2OpenSw	A57.J1:9	
					I_SldO2PBrakeSw	A57.J1:12	
A57.J1:2	O_SldO2MoSpeedB	Slide-Out 2 Motor Speed Control B			I_BatMonMod57	A57.J1:24	
					I_SldO1VacPrSe	A56.J1:13	
					I_SldO2CloseSw	A57.J1:10	
					I_SldO2LimiOutSw	A57.J1:14	
					I_SldO2LimitInSe	A57.J1:11	
					I_SldO2OpenSw	A57.J1:9	
					I_SldO2PBrakeSw	A57.J1:12	
A57.J1:20	O_SldO2Motpos	Slide_Out 2 Motor +		RSo3.B:1	I_BatMonMod57	A57.J1:24	

MULTIPLEX OUTPUT LIST

O_xx... = Physical Ouput Pin ; I_xx... = Physical Input Pin ; D_xx... = CAN Network Signal from the HVAC control Head ; B_xx.. = Multiplex system global Network Variable

Module.Pin#	Signal name		Page	Connected devices	Input involved		
A57.J1:20	O_SldO2Motpos	Slide_Out 2 Motor +		RSo3.B:1	I_SldO1VacPrSe	A56.J1:13	
					I_SldO2CloseSw	A57.J1:10	
					I_SldO2LimiOutSw	A57.J1:14	
					I_SldO2LimitInSe	A57.J1:11	
					I_SldO2OpenSw	A57.J1:9	
					I_SldO2PBrakeSw	A57.J1:12	
A57.J1:3	O_SldO2RemoteLed	Slide_Out 2 Remote Led		SwSo2:2	I_BatMonMod57	A57.J1:24	
					I_SldO1VacPrSe	A56.J1:13	
					I_SldO2CloseSw	A57.J1:10	
					I_SldO2LimiOutSw	A57.J1:14	
					I_SldO2LimitInSe	A57.J1:11	
					I_SldO2OpenSw	A57.J1:9	
					I_SldO2PBrakeSw	A57.J1:12	
					I_SldO2Supply5v	A57.J1:15	
A57.J1:4	O_SldO2SealInfSo	Slide_Out 2 Seal Inflating Valve			I_SldO2CloseSw	A57.J1:10	
					I_SldO2LimiOutSw	A57.J1:14	
					I_SldO2LimitInSe	A57.J1:11	
					I_SldO2OpenSw	A57.J1:9	
A57.J1:5	O_SldO2SealDefSo	Slide_Out 2 Seal Deflating Valve		SoSo3:1	I_BatMonMod57	A57.J1:24	
					I_SldO2CloseSw	A57.J1:10	
					I_SldO2LimiOutSw	A57.J1:14	
					I_SldO2LimitInSe	A57.J1:11	
					I_SldO2OpenSw	A57.J1:9	
					I_SldO2PBrakeSw	A57.J1:12	
A57.J1:7	O_SldO2Motneg	Slide_Out 2 Motor -		RSo4.B:1	I_BatMonMod57	A57.J1:24	
					I_SldO1VacPrSe	A56.J1:13	
					I_SldO2CloseSw	A57.J1:10	
					I_SldO2LimiOutSw	A57.J1:14	
					I_SldO2LimitInSe	A57.J1:11	
					I_SldO2OpenSw	A57.J1:9	
					I_SldO2PBrakeSw	A57.J1:12	
A58.J1:1	O_SldO3MoSpeedA				I_BatMonMod58	A58.J1:24	
					I_SldO1VacPrSe	A56.J1:13	
					I_SldO3CloseSw	A58.J1:10	
					I_SldO3LimiOutSw	A58.J1:14	
					I_SldO3LimitInSe	A58.J1:11	
					I_SldO3OpenSw	A58.J1:9	
					I_SldO3PBrakeSw	A58.J1:12	
A58.J1:2	O_SldO3MoSpeedB				I_BatMonMod58	A58.J1:24	
					I_SldO1VacPrSe	A56.J1:13	
					I_SldO3CloseSw	A58.J1:10	
					I_SldO3LimiOutSw	A58.J1:14	
					I_SldO3LimitInSe	A58.J1:11	

MULTIPLEX OUTPUT LIST

O_xx... = Physical Ouput Pin ; I_xx... = Physical Input Pin ; D_xx... = CAN Network Signal from the HVAC control Head ; B_xx.. = Multiplex system global Network Variable

Module.Pin#	Signal name		Page	Connected devices	Input involved		
A58.J1:2	O_SldO3MoSpeedB				I_SldO3OpenSw	A58.J1:9	
					I_SldO3PBrakeSw	A58.J1:12	
A58.J1:20	O_SldO3Motpos			RSo6.B:1	I_BatMonMod58	A58.J1:24	
					I_SldO1VacPrSe	A56.J1:13	
					I_SldO3CloseSw	A58.J1:10	
					I_SldO3LimiOutSw	A58.J1:14	
					I_SldO3LimitInSe	A58.J1:11	
					I_SldO3OpenSw	A58.J1:9	
					I_SldO3PBrakeSw	A58.J1:12	
A58.J1:3	O_SldO3RemoteLed			SwSo3:2	I_BatMonMod58	A58.J1:24	
					I_SldO1VacPrSe	A56.J1:13	
					I_SldO3CloseSw	A58.J1:10	
					I_SldO3LimiOutSw	A58.J1:14	
					I_SldO3LimitInSe	A58.J1:11	
					I_SldO3OpenSw	A58.J1:9	
					I_SldO3PBrakeSw	A58.J1:12	
					I_SldO3Supply5v	A58.J1:15	
A58.J1:4	O_SldO3SealInfSo				I_SldO3CloseSw	A58.J1:10	
					I_SldO3LimiOutSw	A58.J1:14	
					I_SldO3LimitInSe	A58.J1:11	
					I_SldO3OpenSw	A58.J1:9	
A58.J1:5	O_SldO3SealDefSo				I_BatMonMod58	A58.J1:24	
					I_SldO3CloseSw	A58.J1:10	
					I_SldO3LimiOutSw	A58.J1:14	
					I_SldO3LimitInSe	A58.J1:11	
					I_SldO3OpenSw	A58.J1:9	
					I_SldO3PBrakeSw	A58.J1:12	
A58.J1:7	O_SldO3Motneg			RSo5.B:1	I_BatMonMod58	A58.J1:24	
					I_SldO1VacPrSe	A56.J1:13	
					I_SldO3CloseSw	A58.J1:10	
					I_SldO3LimiOutSw	A58.J1:14	
					I_SldO3LimitInSe	A58.J1:11	
					I_SldO3OpenSw	A58.J1:9	
					I_SldO3PBrakeSw	A58.J1:12	
A59.J1:1	O_SldO4MoSpeedA				I_BatMonMod59	A59.J1:24	
					I_SldO1VacPrSe	A56.J1:13	
					I_SldO4CloseSw	A59.J1:10	
					I_SldO4LimiOutSw	A59.J1:14	
					I_SldO4LimitInSe	A59.J1:11	
					I_SldO4OpenSw	A59.J1:9	
					I_SldO4PBrakeSw	A59.J1:12	
A59.J1:2	O_SldO4MoSpeedB				I_BatMonMod59	A59.J1:24	
					I_SldO1VacPrSe	A56.J1:13	

MULTIPLEX OUTPUT LIST

O_xx... = Physical Ouput Pin ; I_xx... = Physical Input Pin ; D_xx... = CAN Network Signal from the HVAC control Head ; B_xx.. = Multiplex system global Network Variable

Module.Pin#	Signal name		Page	Connected devices	Input involved		
A59.J1:2	O_SldO4MoSpeedB				I_SldO4CloseSw	A59.J1:10	
					I_SldO4LimiOutSw	A59.J1:14	
					I_SldO4LimitInSe	A59.J1:11	
					I_SldO4OpenSw	A59.J1:9	
					I_SldO4PBrakeSw	A59.J1:12	
A59.J1:20	O_SldO4MotPos			RSo7.B:1	I_BatMonMod59	A59.J1:24	
					I_SldO1VacPrSe	A56.J1:13	
					I_SldO4CloseSw	A59.J1:10	
					I_SldO4LimiOutSw	A59.J1:14	
					I_SldO4LimitInSe	A59.J1:11	
					I_SldO4OpenSw	A59.J1:9	
					I_SldO4PBrakeSw	A59.J1:12	
A59.J1:3	O_SldO4RemoteLed			SwSo4:2	I_BatMonMod59	A59.J1:24	
					I_SldO1VacPrSe	A56.J1:13	
					I_SldO4CloseSw	A59.J1:10	
					I_SldO4LimiOutSw	A59.J1:14	
					I_SldO4LimitInSe	A59.J1:11	
					I_SldO4OpenSw	A59.J1:9	
					I_SldO4PBrakeSw	A59.J1:12	
					I_SldO4Supply5v	A59.J1:15	
A59.J1:4	O_SldO4SealInfSo			SoSo9:1	I_SldO4CloseSw	A59.J1:10	
					I_SldO4LimiOutSw	A59.J1:14	
					I_SldO4LimitInSe	A59.J1:11	
					I_SldO4OpenSw	A59.J1:9	
A59.J1:5	O_SldO4SealDefSo			SoSo10:1	I_BatMonMod59	A59.J1:24	
					I_SldO4CloseSw	A59.J1:10	
					I_SldO4LimiOutSw	A59.J1:14	
					I_SldO4LimitInSe	A59.J1:11	
					I_SldO4OpenSw	A59.J1:9	
					I_SldO4PBrakeSw	A59.J1:12	
A59.J1:7	O_SldO4MotNeg			RSo8.B:1	I_BatMonMod59	A59.J1:24	
					I_SldO1VacPrSe	A56.J1:13	
					I_SldO4CloseSw	A59.J1:10	
					I_SldO4LimiOutSw	A59.J1:14	
					I_SldO4LimitInSe	A59.J1:11	
					I_SldO4OpenSw	A59.J1:9	
					I_SldO4PBrakeSw	A59.J1:12	

MULTIPLEX INTPUT LIST

O_xx... = Physical Ouput Pin ; I_xx... = Physical Input Pin ; D_xx... = CAN Network Signal from the HVAC control Head ; B_xx.. = Multiplex system global Network Variable

Module.Pin#	Signal name		Page	Connected devices
A36.JB:13	I_BrkLtSeFrSig	Brake Lights Sensor	12.1	
A36.JB:2	I_IgnKeySw	Ignition Key switch	3.2	
A36.JB:21	I_RrCutOutSw	Rear Junction Box CutOut Switch	3.2	
A36.JB:22	I_FrEngStaSw	Front Engine Start Switch	3.2	
A36.JB:23	I_FireExt1stAl		38.1	A130:3
A36.JB:4	I_HazardSw	Hazard Switch	26.1	Sw4:3
A36.JB:5	I_WakeUp	Wake up signal (Fire alarm, horn, keyless module)	38.1	A41.J1:16
A36.JB:6	I_AccKeySw	Accessories Key switch	3.2	
A36.JB:9	I_ParkBrSe	Paking Brake Sensor	12.1	
A41.J1:10	I_FireSensorA36	Fire Sensor On A36	22.1	
A41.J1:17	I_LugDorLkSw	Luggage Door Lock Switch	18.1	
A41.J1:18	I_KeylessLuggUnl	Keyless luggages doors unlock signal		A31.B:11
A41.J1:19	I_KeylessLockAll	Keyless lock all doors signal		A31.B:22
A41.J1:2	I_DrvLtSw	Driver Light Switch		Sw24:3
A41.J1:20	I_LugDorULkSw	Luggage Door Unlock Switch	18.2	
A41.J1:21	I_KeylessEntReq			A31.B:10
A41.J1:3	I_HornSw	Horn Switch		A103:5
A41.J1:4	I_KeylessDrUnl	Keyless door unlock signal		A31.A:1
A41.J1:5	I_EntDorOpSe	Entrance Door Open Sensor		D73:A
A41.J1:6	I_KeylessPanic	Keyless panic button signal	32.1	A31.B:8
A41.J1:7	I_KeylessIntru	Keyless intrusion signal	32.1	A31.B:9
A41.J1:8	I_EntDrUnlockSw	Entrance door unlock switch		Sw104:4
A41.J1:9	I_EntDorLockSw	VIP Entrance Door Lock Switch		Sw104:6
A42.J1:20	I_SwitchOption			
A42.J1:21	I_SwitchOption2			
A42.J1:7	I_LevelLowSw	Level low switch	32.1	
A42.J1:8	I_LwWipIntSw	Lower Wiper Intermitant Switch	34.1	Sw1.C258:7
A43.J1:17	I_FJBLtSw	Front Junction Box Door Open	25.1	
A43.J1:19	I_TgAxlSw	Tag Axle Switch	32.1	Sw64.B:1
A43.J1:20	I_BlinkSw	Courtesy Blink Switch		Sw1.C258:5
A43.J1:3	I_HiBeamCallSw	Hi/Low Beam Switch	26.1	Sw1.C259:4
A43.J1:4	I_HdLtPos1Sw	Head Light Switch Position Markers	26.1	
A43.J1:6	I_RevAlrmSw	Reverse alarm switch	32.2	
A43.J1:7	I_HornSelectSw	Horn Select switch	9.1	Sw63A:3
A43.J1:8	I_HdLtHiLowBmSw	Head Lights High and Low Beam Switch	26.1	Sw1.C258:8
A43.J1:9	I_DiffLockSw	Differential lock switch		Shrk152
A44.J1:10	I_FireExt2ndAlm		38.1	A130:11
A45.J1:12	I_HdLtPos2SwLH	Head Light Switch Beam Position 2 LH	26.1	
A45.J1:24	I_BatMonMod45		6.1	A45.J1:28
A45.J1:9	I_LHFlshSw	Left Hand Flasher Switch	26.1	
A46.J1:24	I_BatMonMod46		6.1	A46.J1:26
A46.J1:9	I_LwWshSw	Lower Wiper Washer Switch	34.1	Sw1.C258:6
A47.J1:10	I_DefrostHighSw	Passenger defrost speed increase switch	29.1	Sw122:3

MULTIPLEX INTPUT LIST

O_xx... = Physical Ouput Pin ; I_xx... = Physical Input Pin ; D_xx... = CAN Network Signal from the HVAC control Head ; B_xx.. = Multiplex system global Network Variable

Module.Pin#	Signal name		Page	Connected devices
A47.J1:11	I_CoilTherSe	Coil sensing thermostat		Se52.A:1
A47.J1:12	I_DefrostLowSw	Passenger defrost speed decrease switch	29.1	Sw122:4
A47.J1:24	I_BatMonMod47		6.1	A47.J1:27
A48.J1:10	I_HdLtPos2SwRH	Head Light Switch Beam Position 2 RH	26.1	
A48.J1:12	I_RHFlshSw	Right Hand Flasher Switch	26.1	
A48.J1:24	I_BatMonMod48		6.1	A48.J1:28
A49.J1:17	I_RJBLtSw	Rear Junction Light Switch		
A49.J1:2	I_WdoOpenSe	Passenger Window Open Sensor	25.1	
A49.J1:3	I_AcDorOpSe	Condensor Door Open Switch	25.1	
A49.J1:4	I_LuggDoorSw	Luggage Door Switch	36.1	
A49.J1:7	I_Alt3Voltage			
A49.J1:8	I_Alt1Voltage		3.2	Alt1D.C:2
A49.J1:9	I_Alt2Voltage		3.2	
A50.J1:11	I_NeutralSe	Neutral Signal Sensor	3.2	A1_1_101:Neutral
A50.J1:12	I_RetdrSig	Retarder Signal	12.1	A1_1_101:Retarder_Avtive_Lamp
A51.J1:10	I_BrkLtSeRrSig	Brake Lights Sensor	12.1	
A51.J1:12	I_RHFlshSwRrSig	RH FlasherSwitch Rear Signal	26.2	
A51.J1:24	I_BatMonMod51			
A51.J1:9	I_LHFlshSwRrSig	LH FlasherSwitch Rear Signal	26.2	
A52.J1:10	I_RrStrtEnSw	Rear Start Enable Switch	3.2	
A52.J1:11	I_EngStaRrSw	Engine Start Rear Switch	3.2	Sw59:2
A52.J1:12	I_EngDoorSe	Engine Door Sensor		Se31:A
A52.J1:13	I_AcPresHiSSe	Ac Pressure High Side Sensor	18.2	Se23:C
A52.J1:14	I_AcPresLoSSe	Ac Pressure Low Side Sensor	18.2	Se24:C
A52.J1:9	I_FrStrtEnSw	Front Start Enable Switch	3.2	Sw58:3
A54.J1:24	I_BatMonMod54		6.1	A54.J1:29
A55.J1:1	I_DrvTempSe	Driver Temperature sensor	18.1	Se21:2
A55.J1:10	I_RetarderSel	Retarder Selected	12.1	Sw16:3
A55.J1:17	I_BackUpCamSw	Back up camera switch		Sw119:3
A55.J1:18	I_UpWshSw	Upper Washer Wiper Switch	34.1	Sw6:3
A55.J1:19	I_HeadLmpWshSw		34.1	Sw6:4
A55.J1:20	I_UpWipIntSw	Upper Wiper Intermitant Switch	34.1	
A55.J1:21	I_UpWipSw	Upper Wiper Switch	34.1	Sw5:6
A55.J1:6	I_FogLightSw	Fog Lights Switch	26.3	Sw3:3
A55.J1:7	I_DockingLtSw	Docking Lights Switch	26.3	Sw99:3
A55.J1:8	I_CorneringLtSw	Cornering Light Switch	26.3	Sw99:1
A55.J1:9	I_LowDockLtsSw	Low docking lights switch		Sw102:3
A56.J1:10	I_SldO1CloseSw	Slide-Out 1 Close Sw		SwSo1.A:4
A56.J1:11	I_SldO1LimitInSe	Slide-Out 1 Limit In Detection Sw		SESO2_SESO3:4
A56.J1:12	I_SldO1PBrakeSw	Slide-Out 1 Parking Brake Sw		
A56.J1:13	I_SldO1VacPrSe	Slide-Out 1 Vaccum Pressure Transducer		SESO1:C
A56.J1:14	I_SldO1LimiOutSw	Slide-Out 1 Limit Out Detection Sw		SESO2_SESO3:2
A56.J1:15	I_SldO1Supply5v	Slide Out 1 5v Supply		

MULTIPLEX INTPUT LIST

O_xx... = Physical Ouput Pin ; I_xx... = Physical Input Pin ; D_xx... = CAN Network Signal from the HVAC control Head ; B_xx.. = Multiplex system global Network Variable

Module.Pin#	Signal name		Page	Connected devices
A56.J1:24	I_BatMonMod56			A56.J1:27
A56.J1:9	I_SldO1OpenSw	Slide-Out 1 Open Sw		SwSo1.A:5
A57.J1:10	I_SldO2CloseSw	Slide-Out 2 Close Sw		SwSo2:4
A57.J1:11	I_SldO2LimitInSe	Slide-Out 2 Limit In Detection Sw		SESO5_SESO6:4
A57.J1:12	I_SldO2PBrakeSw	Slide-Out 2 Parking Brake Sw		
A57.J1:14	I_SldO2LimiOutSw	Slide-Out 2 Limit Out Detection Sw		SESO5_SESO6:2
A57.J1:15	I_SldO2Supply5v	Slide Out 2 5v Supply		SESO5_SESO6:3
A57.J1:24	I_BatMonMod57			A57.J1:29
A57.J1:9	I_SldO2OpenSw	Slide-Out 2 Open Sw		SwSo2:5
A58.J1:10	I_SldO3CloseSw			SwSo3:4
A58.J1:11	I_SldO3LimitInSe			SESO7_SESO8:4
A58.J1:12	I_SldO3PBrakeSw			
A58.J1:14	I_SldO3LimiOutSw			SESO7_SESO8:2
A58.J1:15	I_SldO3Supply5v	Slide Out 3 Power Supply		SESO7_SESO8:3
A58.J1:24	I_BatMonMod58			A58.J1:26
A58.J1:9	I_SldO3OpenSw			SwSo3:5
A59.J1:10	I_SldO4CloseSw			SwSo4:4
A59.J1:11	I_SldO4LimitInSe			SESO9_SESO10:4
A59.J1:12	I_SldO4PBrakeSw			
A59.J1:14	I_SldO4LimiOutSw			SESO9_SESO10:2
A59.J1:15	I_SldO4Supply5v	Slide Out 1 5v Supply		SESO9_SESO10:3
A59.J1:24	I_BatMonMod59			A59.J1:27
A59.J1:9	I_SldO4OpenSw			SwSo4:5

MULTIPLEX ERROR MESSAGES LIST

FMI 3 = Shorted High ; FMI 4 = Shorted Low ; FMI 5 = Open Circuit ; FMI 6 = Current above Normal

Cluster message	SID/PSID	FMI	Module.Pin#	Page	Cluster message	SID/PSID	FMI	Module.Pin#	Page
A/C Pres HiSd	PSID #12	3, 4	A52.J1:13	18.2	Hazard Switch	PSID #138	3, 4	A36.JB:4	26.1
A/C Pres LoSd	PSID #13	3, 4	A52.J1:14	18.2	Hd Light Call	PSID #140	3, 4	A43.J1:3	26.1
Aux AC fan	SID #39	3, 4, 6	A46.J1:1		HdLamp Wsh Pmp	SID #48	3, 4, 5, 6	A46.J1:21	34.1
Aux Refr sol	SID #46	3, 4, 5, 6	A46.J1:8		Head Lights Pos1	PSID #143	3, 4	A43.J1:4	26.1
Backup Light &	PSID #167	3, 4, 6	A50.J1:20	26.2	Hi Low Beam	SID #62	3, 4	A43.J1:8	26.1
Battery Equalizer	SID #61	3, 4	A45.J1:12	26.1	High Beam LH	PSID #141	3, 4, 5, 6	A45.J1:6	26.1
Blinker Sw	PSID #139	3, 4	A43.J1:20		High Beam RH	PSID #145	3, 4, 5, 6	A48.J1:3	26.1
Brk Lts Sens	PSID #119	3, 4	A36.JB:13	12.1	Horn	PSID #83	3, 4, 6	A43.J1:13	9.1
Ceiling Door Lt	PSID #108	3, 4, 5, 6	A47.J1:8	29.1	LH Corner Lts	PSID #120	3, 4, 5, 6	A45.J1:5	26.3
Center Flash LH	PSID #124	3, 4, 6	A50.J1:5	26.2	LH Docking Light	PSID #122	3, 4, 5, 6	A51.J1:4	26.3
Center Flash RH	PSID #125	3, 4, 6	A50.J1:7	26.2	Low Beam LH	PSID #142	3, 4, 5, 6	A45.J1:7	26.1
Center Mkr	PSID #27	3, 4, 6	A50.J1:8	26.2	Low Beam RH	PSID #146	3, 4, 5, 6	A48.J1:4	26.1
Cond Rly spd1	PSID #41	3, 4, 5, 6	A54.J1:5	18.2	Lower Washer pmp	PSID #181	4, 6	A46.J1:3	34.1
Condensor Door Sw	PSID #7	3, 4	A49.J1:3	25.1	Lower Washer Sw	PSID #188	3, 4	A46.J1:9	34.1
Cornering Dash	PSID #200	3, 4	A55.J1:8	26.3	Lower Wip Int	PSID #183	3, 4	A42.J1:8	34.1
Cyclope Lt	PSID #116	4, 6	A51.J1:7	26.2	Lugg doors lock	SID #44	3, 4, 5, 6	A36.JA:7	
Defr water Pmp	SID #41	3, 4	A47.J1:20	18.1	Lugg doors unlk	SID #45	3, 4, 5, 6	A36.JA:6	
Diff Lock sol	SID #36	3, 4, 6	A52.J1:4	11.1	Park brak Sens	PSID #162	3, 4	A36.JB:9	12.1
Docking Dash Sw	PSID #40	3, 4	A55.J1:7	26.3	Pass def fan	SID #38	3, 4, 5, 6	A47.J1:7	29.1
Driver Def Fan	PSID #180	3, 4, 5, 6	A47.J1:1	18.1	Pass Heat Sol	PSID #24	3, 4, 6	A54.J1:8	18.2
Driver heat Sol	PSID #16	3, 4, 5, 6	A46.J1:6	18.1	Pass Rfg Sol	PSID #23	3, 4, 5, 6	A54.J1:3	18.2
Driver Light Sw	PSID #104	3, 4, 5, 6	A47.J1:6	29.1	Pass. Wtr pump	PSID #17	4, 5, 6	A54.J1:4	18.2
Driver Rfg Sol	PSID #29	3, 4, 5, 6	A46.J1:5	18.1	Rear CutOut Sw	PSID #18	3, 4	A36.JB:21	3.2
Driver Sensor	PSID #28	3, 4, 5	A55.J1:1	18.1	RearFlsh LH	PSID #131	3, 4, 6	A51.J1:21	26.2
Drv air Trap	SID #64	3, 4, 6	A44.J1:2	18.1	RearFlsh RH	PSID #132	3, 4, 6	A51.J1:3	26.2
Elec.Horn SW61	PSID #82	4	A41.J1:3		Retarder signal	PSID #164	3, 4	A50.J1:12	12.1
Emergency Relay	PSID #44	3, 4, 5, 6	A36.JA:17	3.2	Rev lights	SID #43	3, 4, 6	A50.J1:3	26.3
Engine Fan Spd1	PSID #53	3, 4, 5, 6	A52.J1:1	13.1	RH Corner Light	PSID #121	3, 4, 5, 6	A48.J1:5	26.3
Engine Fan Spd2	PSID #54	3, 4, 5, 6	A52.J1:2	13.1	RH Docking Light	PSID #123	3, 4, 5, 6	A51.J1:5	26.3
Evap Motor Rly	PSID #77	3, 4, 5, 6	A54.J1:7	18.2	Rr Clearance lights	PSID #151	3, 4, 6	A50.J1:4	26.2
Fire Sensor	PSID #79	3, 4	A41.J1:10	22.1	Rr Start Sw	PSID #59	3, 4	A52.J1:11	3.2
Flash RH Sw	PSID #133	3, 4	A48.J1:12	26.1	RrStart Enable Sw	PSID #57	3, 4	A52.J1:10	3.2
Flasher LH	PSID #130	3, 4	A45.J1:9	26.1	Ser Brake Trans	SID #49	3, 4, 6	A51.J1:1	15.1
Fog's lights RH	PSID #136	3, 4, 5, 6	A48.J1:8	26.3	SldO 5v supply	SID #23	4	A56.J1:15	
Foot trap	PSID #37	3, 4, 6	A45.J1:2	18.1	SldO Close Sw	SID #18	3, 4	A56.J1:10	
FR Clearance lights	PSID #137	3, 4, 6	A44.J1:8	26.1	SldO Limit In	SID #19	3, 4	A56.J1:11	
Fr Flsh-Mkr LH	PSID #128	3, 4, 6	A45.J1:3	26.1	SldO Limit Out	SID #20	3, 4	A56.J1:14	
Fr Side Flsh	PSID #10	3, 4, 6	A48.J1:20	26.1	SldO Mot Neg	SID #15	3, 4, 5, 6	A56.J1:7	
Fr Start Sw	PSID #58	3, 4	A36.JB:22	3.2	SldO Mot Pos	SID #16	3, 4, 5, 6	A56.J1:20	
Front Flash RH	PSID #126	3, 4, 6	A48.J1:6	26.1	SldO Mot SpeedA	SID #9	3, 6	A56.J1:1	
FrontMkr Lts LH	PSID #148	3, 4, 6	A45.J1:21	26.1	SldO Mot SpeedB	SID #10	3, 6	A56.J1:2	
FrontMkr Lts RH	PSID #149	3, 4, 6	A48.J1:21		SldO Open Sw	SID #17	3, 4	A56.J1:9	
FrStart Enable Sw	PSID #56	3, 4	A52.J1:9	3.2	SldO Park Br	SID #8	3, 4	A56.J1:12	

MULTIPLEX ERROR MESSAGES LIST

FMI 3 = Shorted High ; FMI 4 = Shorted Low ; FMI 5 = Open Circuit ; FMI 6 = Current above Normal

Cluster message	SID/PSID	FMI	Module.Pin#	Page					
SldO Remote Led	SID #11	3, 4, 5, 6	A56.J1:3						
SldO Seal Def	SID #13	3, 4, 5, 6	A56.J1:5						
SldO Seal Inf	SID #12	3, 4, 5, 6	A56.J1:4						
SldO Secu Pin	SID #21	3, 4, 5, 6	A56.J1:21						
SldO Vacc Gen	SID #14	3, 4, 5, 6	A56.J1:6						
SldO Vacuum Sensor	SID #5	3, 4	A56.J1:13						
Starter Relay	PSID #60	4, 6	A52.J1:6	3.2					
StepLts	PSID #117	3, 4, 6	A47.J1:5	29.1					
Tag axle Sw	PSID #165	3, 4	A43.J1:19	32.1					
Trans Neutral Sens	PSID #168	3, 4	A50.J1:11	3.2					
Under Floor lights	PSID #112	4, 6	A46.J1:20	25.1					
Unloader RH	PSID #32	3, 4, 6	A52.J1:21	18.2					
Upper Brk Lamp	PSID #43	3, 4, 6	A51.J1:6	26.2					
Upper Wash Pmp	PSID #189	4, 6	A46.J1:4	34.1					
Upper Wash Sw	PSID #190	3, 4	A55.J1:18	34.1					
Upper Wiper Int	PSID #191	3, 4	A55.J1:20	34.1					
Upper Wiper Sw	PSID #192	3, 4	A55.J1:21	34.1					
UpperWiper Mot	PSID #193	3, 4, 6	A46.J1:2	34.1					

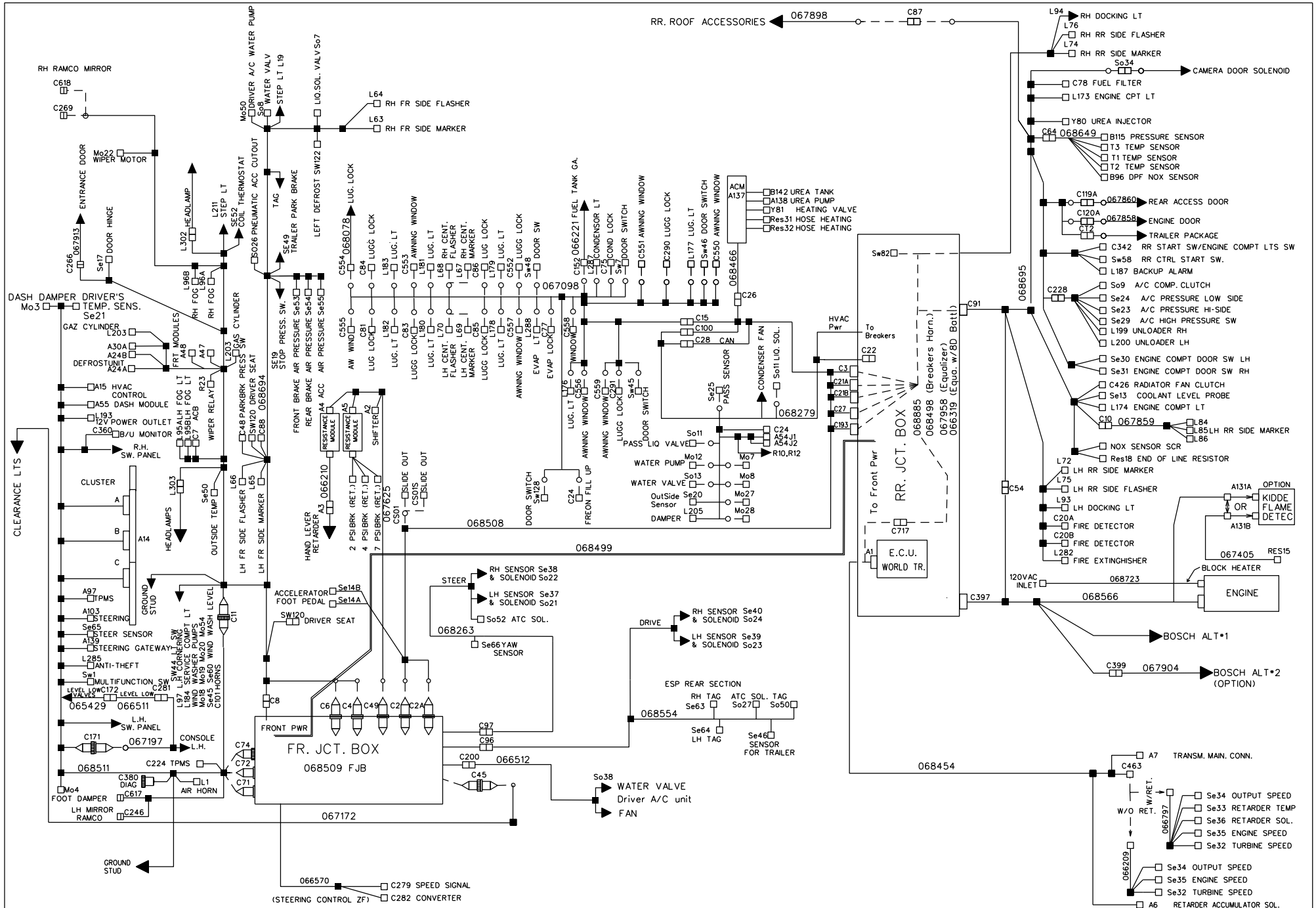

PREVOST	WIRING DIAGRAM VIP MUX	NO: D061360	PAGE: C1	REVISION 00

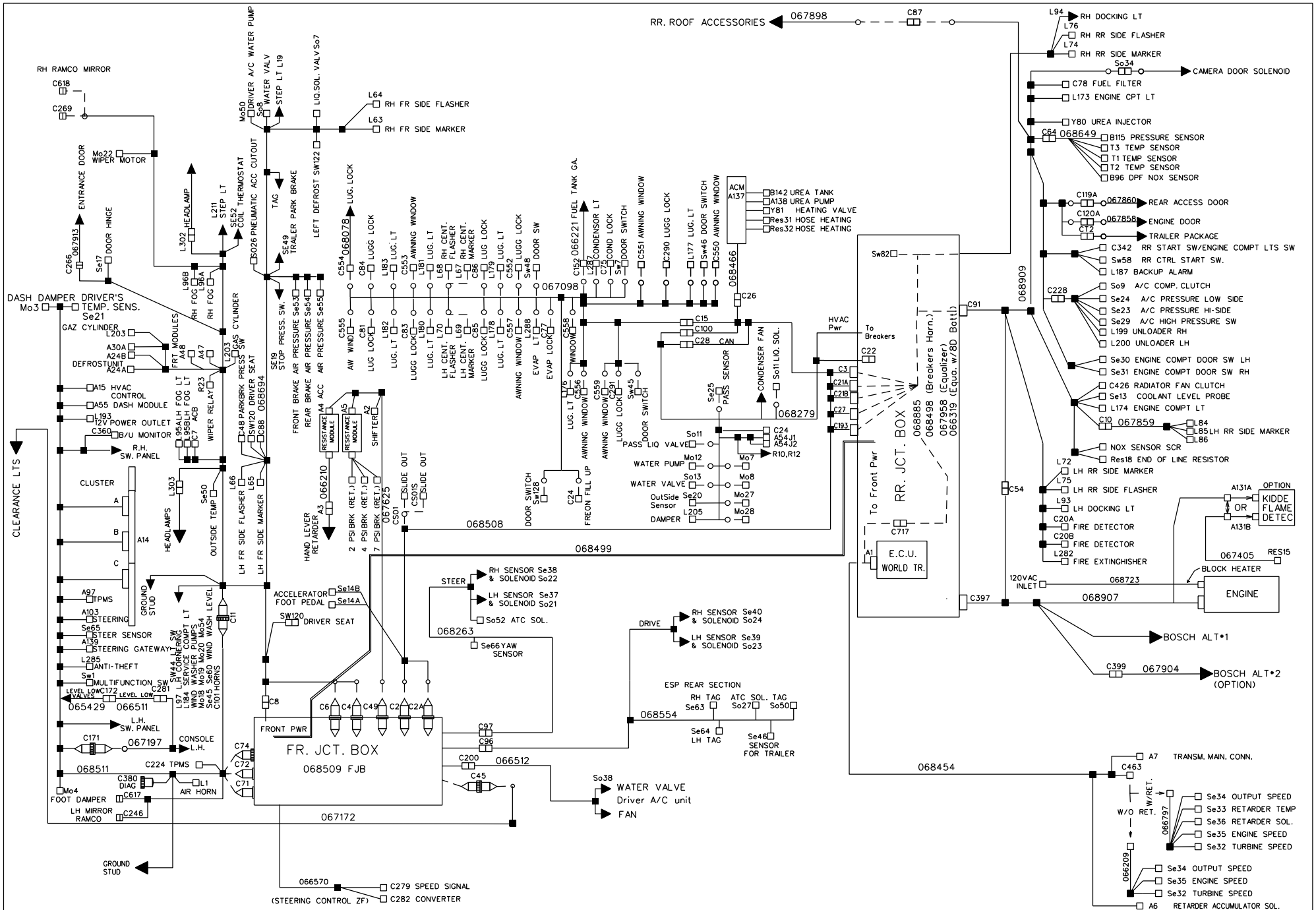

PREVOST	WIRING DIAGRAM VIP MUX	NO: D061360	PAGE: C1	REVISION 02

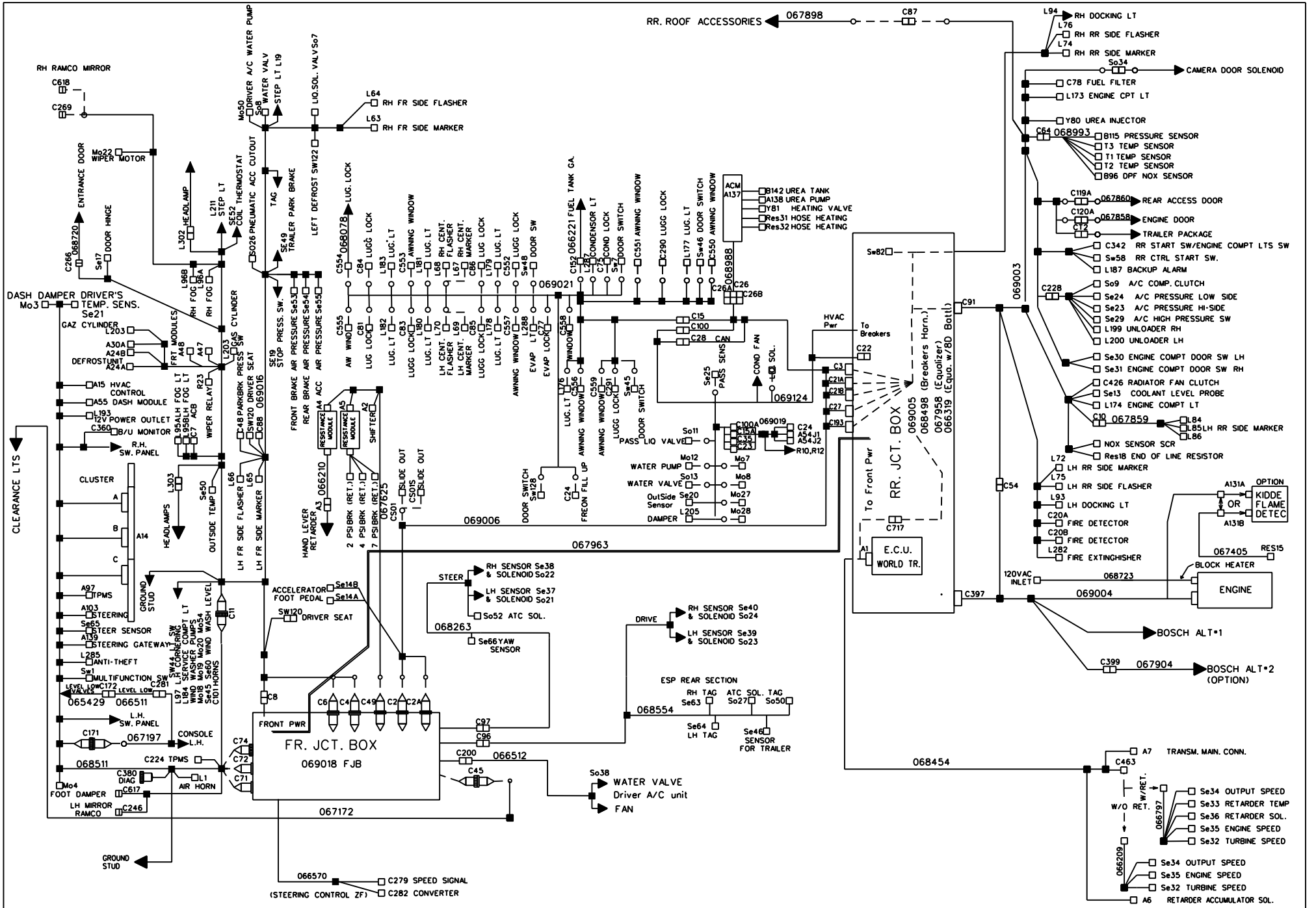
RR. ROOF ACCESSORIES
067898
RH RAMCO MIRROR
ENTRANCE DOOR
DOOR HINGE
DASH DAMPER DRIVER'S TEMP. SENS.
GAZ CYLINDER
DEFROSTUNIT
HVAC CONTROL
DASH MODULE
12V POWER OUTLET
B/U MONITOR
R.H. SW. PANEL
CLUSTER
L.H. SW. PANEL
CONSOLE L.H.
FOOT DAMPER
LH MIRROR RAMCO
AIR HORN
CLEARANCE LTS
GROUND STUD
FRONT PWR
FR. JCT. BOX
069018 FJB
ACCELERATOR FOOT PEDAL
DRIVER SEAT
STEER
DRIVE
ESP REAR SECTION
RH SENSOR Se38 & SOLENOID So22
LH SENSOR Se37 & SOLENOID So21
So52 ATC SOL.
Se66 YAW SENSOR
RH SENSOR Se40 & SOLENOID So24
LH SENSOR Se39 & SOLENOID So23
RH TAG Se63
ATC SOL. TAG So27
So50
LH TAG Se64
SENSOR FOR TRAILER Se46
WATER VALVE Driver A/C unit FAN So38
RR. JCT. BOX
E.C.U. WORLD TR.
To Front Pwr
To Breakers
HVAC Pwr
069005 (Breakers Horn.)
068498 (Equalizer)
067958 (Equa. w/8D Batt.)
066319 (Equa. w/4D Batt.)
RH DOCKING LT
RH RR SIDE FLASHER
RH RR SIDE MARKER
CAMERA DOOR SOLENOID
C78 FUEL FILTER
L173 ENGINE CPT LT
Y80 UREA INJECTOR
068993
B115 PRESSURE SENSOR
T3 TEMP SENSOR
T1 TEMP SENSOR
T2 TEMP SENSOR
B96 DPF NOX SENSOR
REAR ACCESS DOOR
ENGINE DOOR
TRAILER PACKAGE
RR START SW/ENGINE COMPT LTS SW
RR CTRL START SW.
L187 BACKUP ALARM
A/C COMP. CLUTCH
A/C PRESSURE LOW SIDE
A/C PRESSURE HI-SIDE
A/C HIGH PRESSURE SW
L199 UNLOADER RH
L200 UNLOADER LH
ENGINE COMPT DOOR SW LH
ENGINE COMPT DOOR SW RH
C426 RADIATOR FAN CLUTCH
COOLANT LEVEL PROBE
L174 ENGINE COMPT LT
067859
NOX SENSOR SCR
Res18 END OF LINE RESISTOR
LH RR SIDE MARKER
LH RR SIDE FLASHER
LH DOCKING LT
FIRE DETECTOR
FIRE EXTINGHISHER
OPTION KIDDE FLAME DETEC
OR
067405
BLOCK HEATER
120VAC INLET
068723
ENGINE
069004
BOSCH ALT*1
BOSCH ALT*2 (OPTION)
067904
TRANSM. MAIN. CONN.
W/RET.
W/O RET.
Se34 OUTPUT SPEED
Se33 RETARDER TEMP
Se36 RETARDER SOL.
Se35 ENGINE SPEED
Se32 TURBINE SPEED
Se34 OUTPUT SPEED
Se35 ENGINE SPEED
Se32 TURBINE SPEED
RETARDER ACCUMULATOR SOL.
066570
(STEERING CONTROL ZF)
C279 SPEED SIGNAL
C282 CONVERTER
067172
068454
068554
068263
066512
067963
069006
069021
069124
069019
066210
067625
066221 FUEL TANK GA.
068078 LUG. LOCK
068988
ACM A137
B142 UREA TANK
A138 UREA PUMP
Y81 HEATING VALVE
Res31 HOSE HEATING
Res32 HOSE HEATING
WATER PUMP
WATER VALVE
OutSide Sensor
DAMPER
PASS LIQ VALVE
COND FAN SOL.
DOOR SWITCH
FREON FILL UP
HAND LEVER RETARDER
2 PSI BRK (RET.)
4 PSI BRK (RET.)
7 PSI BRK (RET.)
SLIDE OUT
SHIFTER
RESISTANCE MODULE
FRT MODULES
RR JCT. BOX
069003
C91
C54
C397
C399
C87
C22
C193
C100
C15
C28 CAN
C26
C26A
C26B
C10
C228
C119A
C120A
C12
C64
C463
C97
C96
C200
C45
C74
C72
C71
C8
C6
C4
C49
C2
C2A
C11
C281
C224 TPMS
C380 DIAG
C617
C246
C171
C172
C269
C618
C266
C554
C555
C556
C557
C558
C559
C560
C561
C562
C563
C564
C565
C566
C567
C568
C569
C570
C571
C572
C573
C574
C575
C576
C577
C578
C579
C580
C581
C582
C583
C584
C585
C586
C587
C588
C589
C590
C591
C592
C593

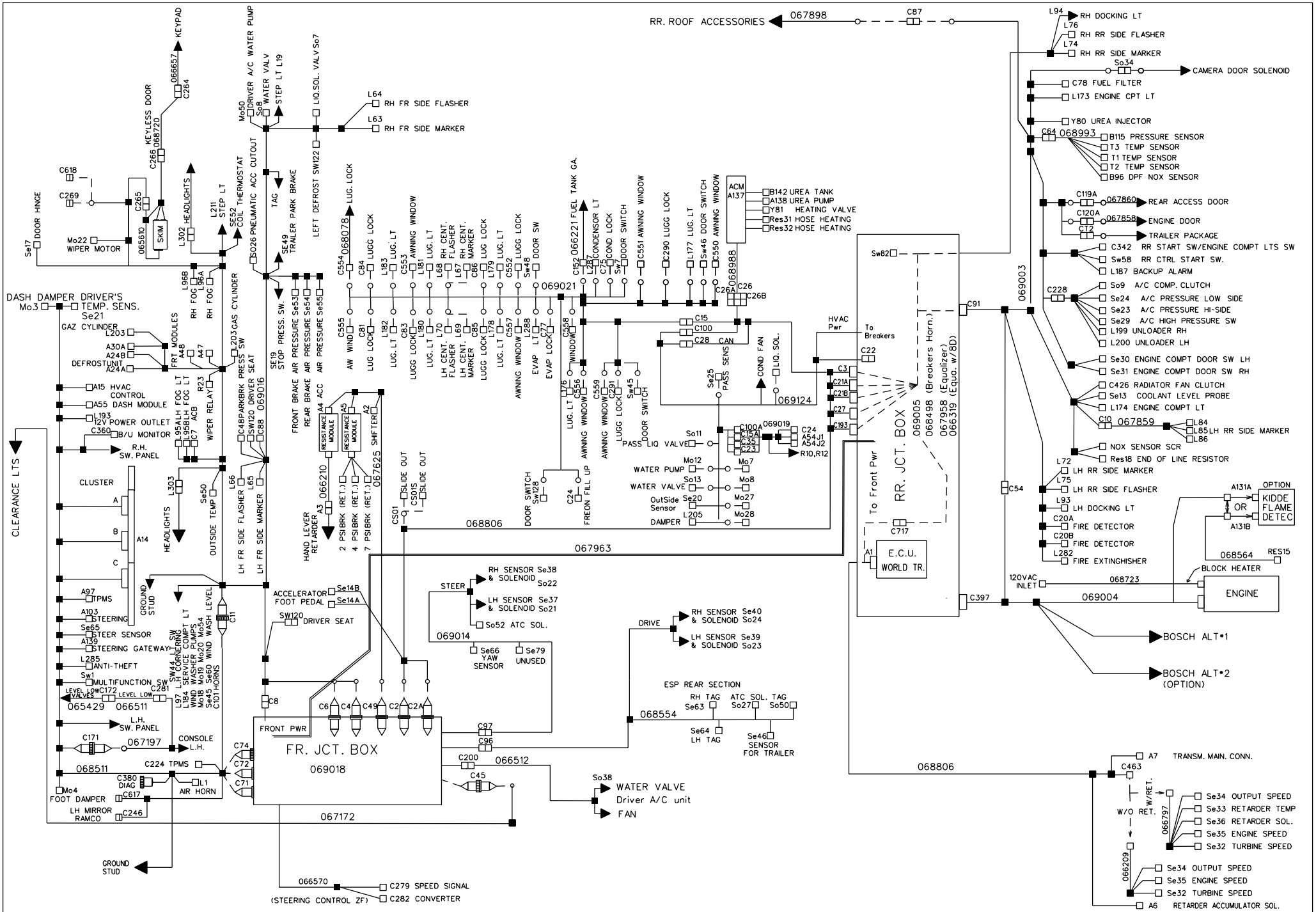

PREVOST	WIRING DIAGRAM VIP MUX	NO: D061360	PAGE: C1	REVISION 06

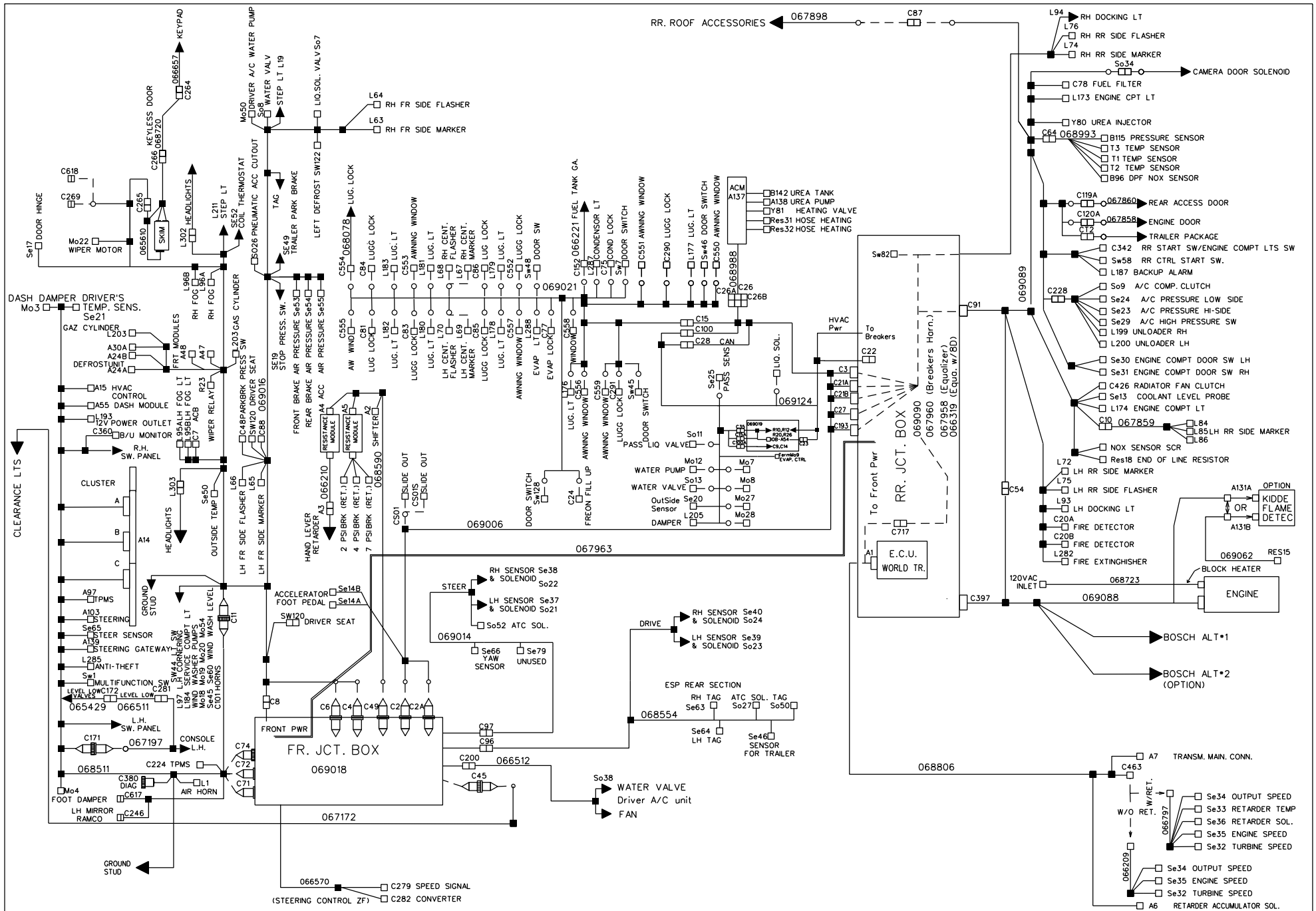

PREVOST	WIRING DIAGRAM VIP MUX	NO: D061360	PAGE: C1	REVISION 08

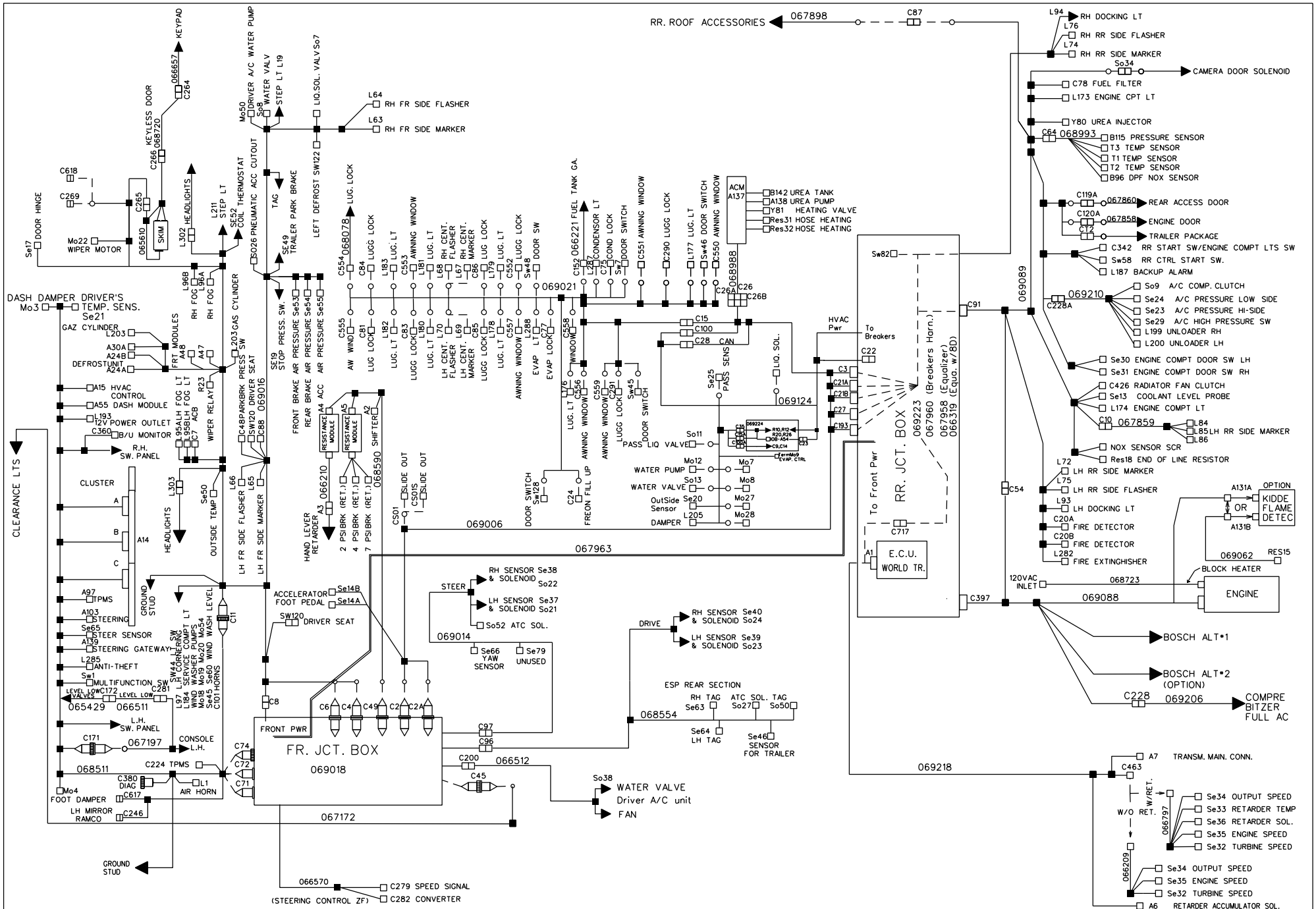

PREVOST	WIRING DIAGRAM VIP MUX	NO: D061360	PAGE: C1	REVISION 09

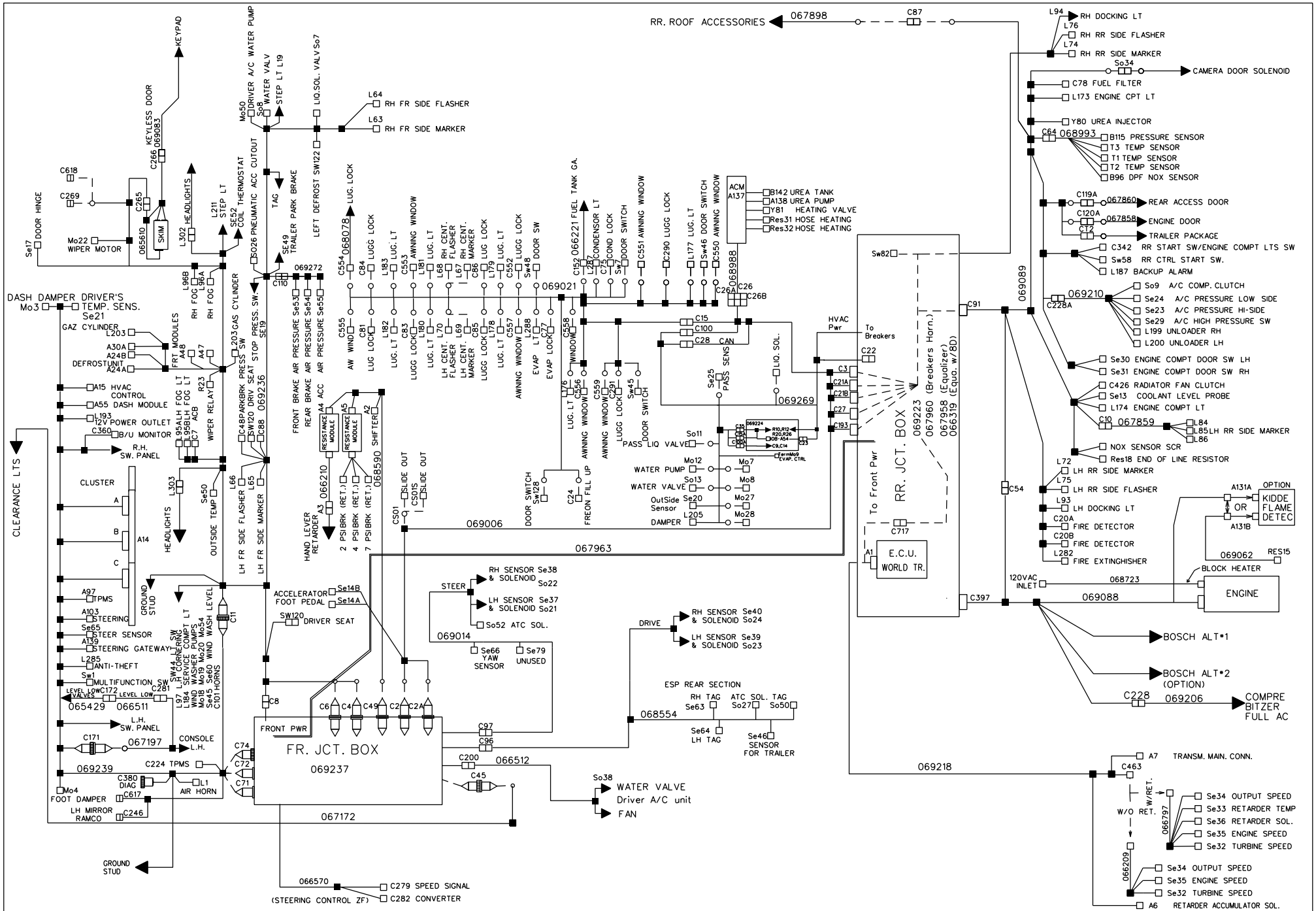

PREVOST	WIRING DIAGRAM VIP MUX	NO: D061360	PAGE: C1	REVISION 11

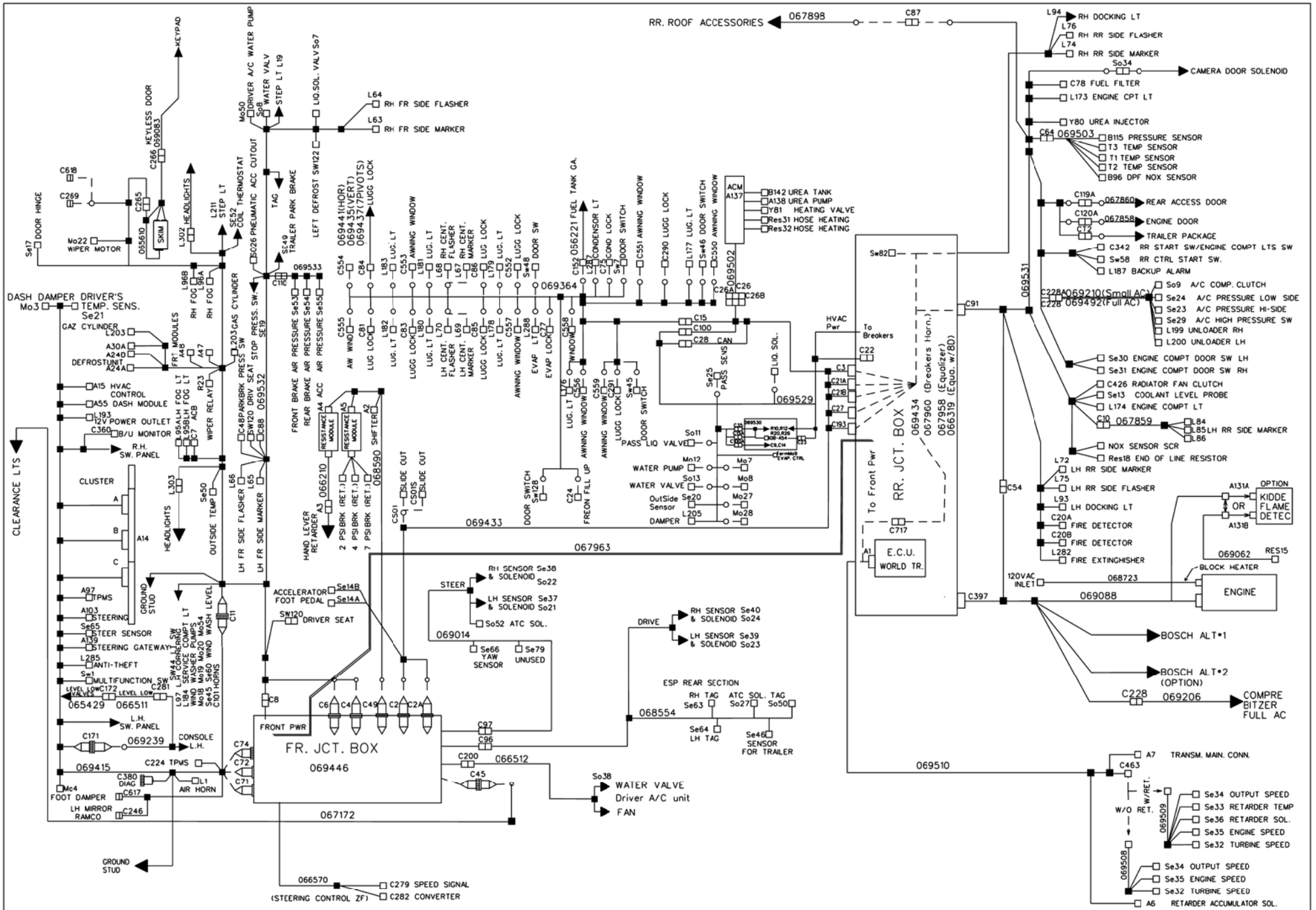

PREVOST	WIRING DIAGRAM VIP MUX	NO: D061360	PAGE: C1	REVISION 13-1

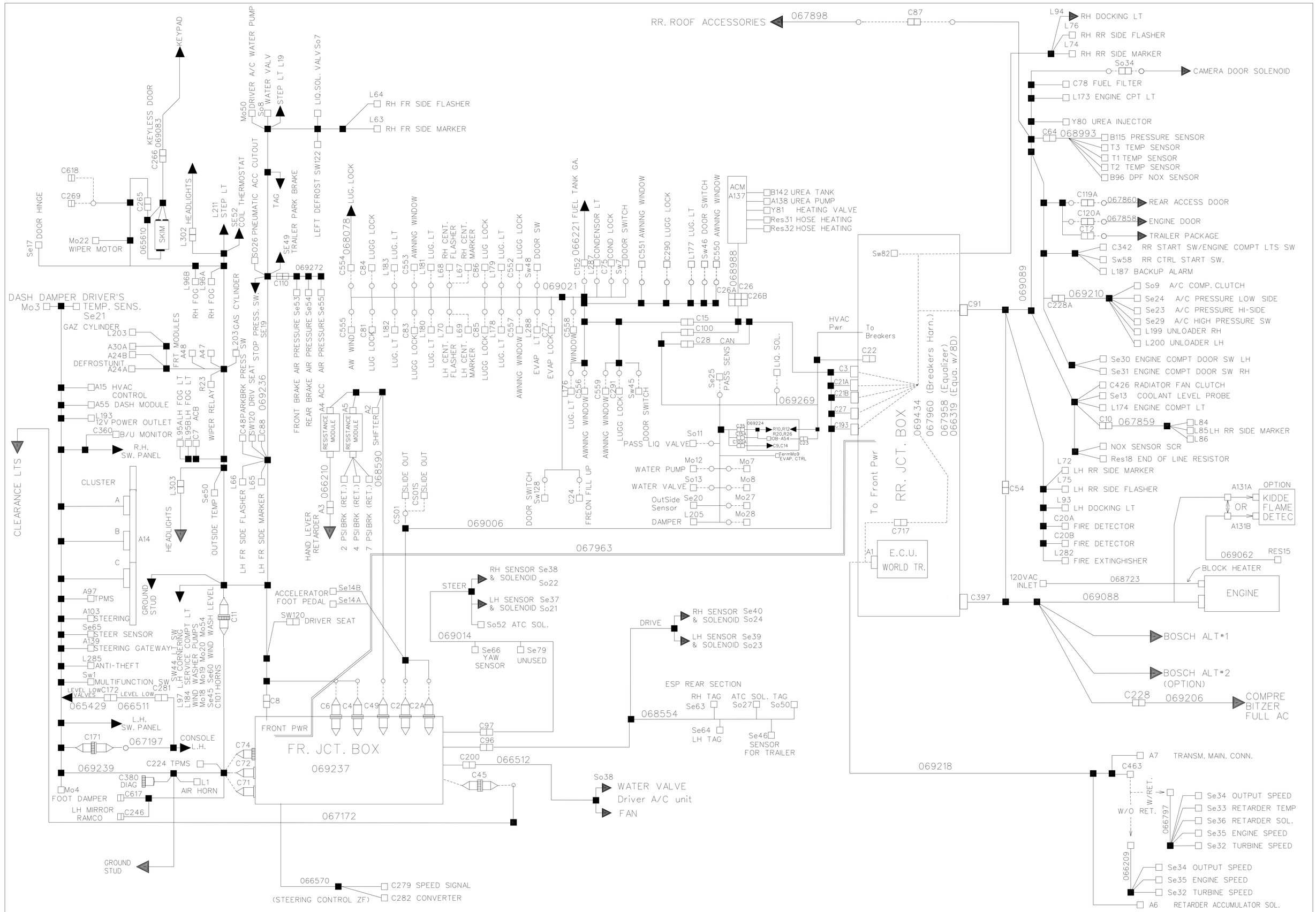

PREVOST	WIRING DIAGRAM VIP MUX	NO: D061360	PAGE: C1	REVISION 14

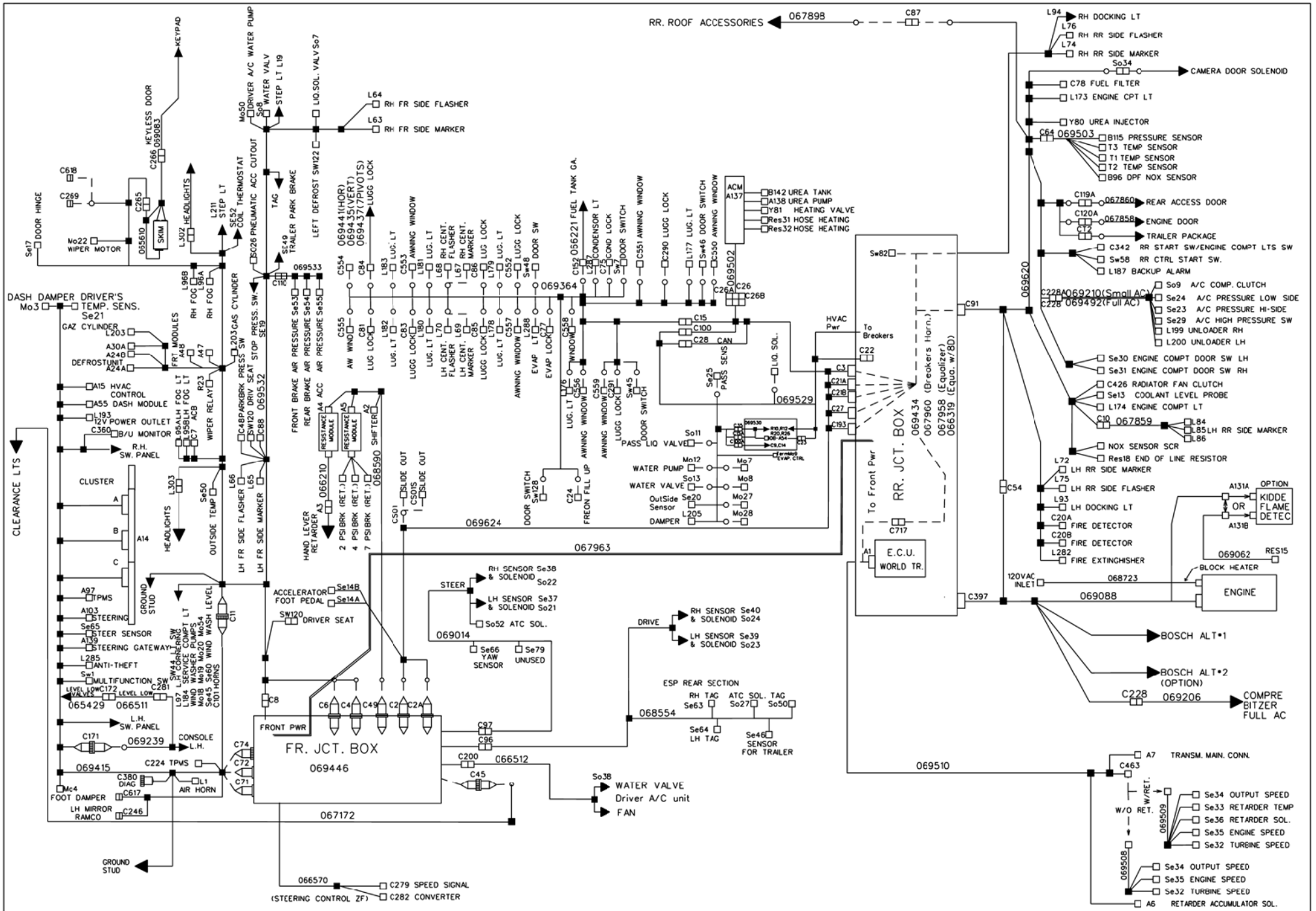

PREVOST	WIRING DIAGRAM VIP MUX	NO: D061360	PAGE: C1	REVISION 15

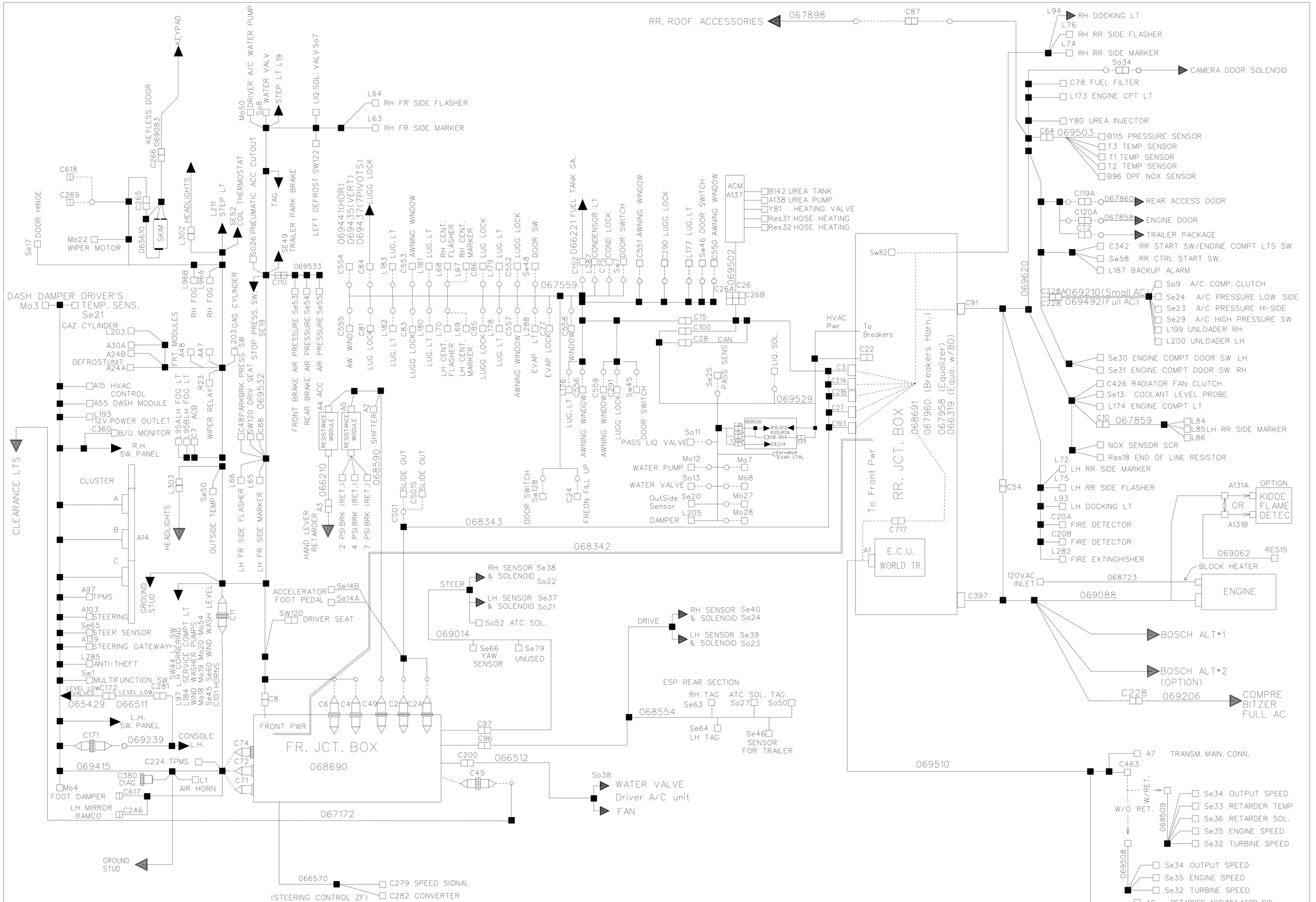

PREVOST	WIRING DIAGRAM VIP MUX	NO: D061360	PAGE: C1	REVISION 16

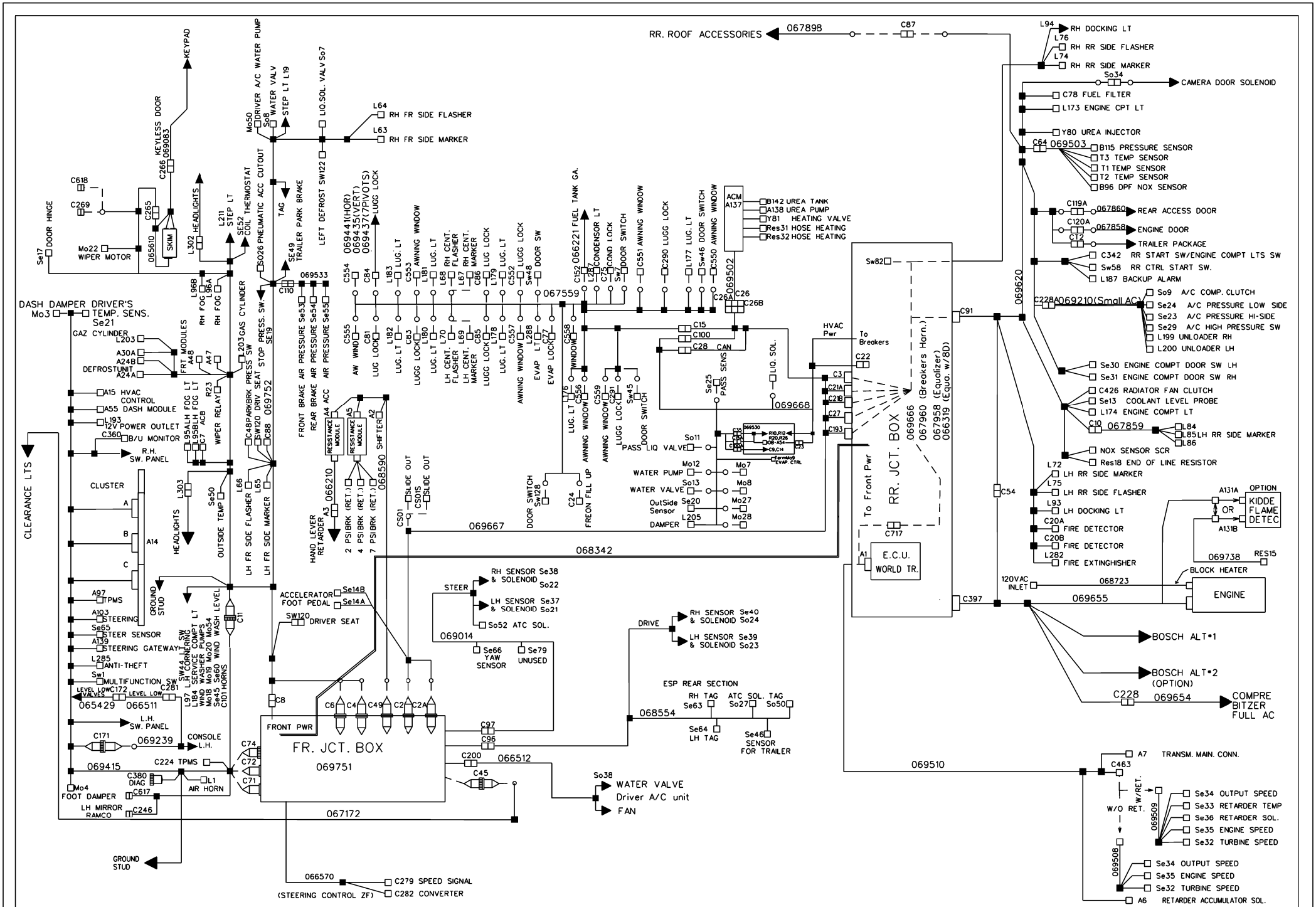

PREVOST	WIRING DIAGRAM VIP MUX	NO: D061360	PAGE: C1	REVISION 17

RR. ROOF ACCESSORIES 069647 C87

KEYPAD
KEYLESS DOOR 069083
C266
C618
C269
C265
065610
SKIM
DOOR HINGE Se17
Mo22 WIPER MOTOR
L302 HEADLIGHTS
L211 STEP LT
SE52 COIL THERMOSTAT
S026 PNEUMATIC ACC CUTOUT
TAG
SE49 TRAILER PARK BRAKE
Mo50 DRIVER A/C WATER PUMP
So8 WATER VALV
STEP LT L19
LIQ.SOL. VALV So7
LEFT DEFROST SW122
L64 RH FR SIDE FLASHER
L63 RH FR SIDE MARKER
C110
069533
L96B RH FOG
L96A RH FOG
S203 GAS CYLINDER
DASH DAMPER DRIVER'S TEMP. SENS. Se21
Mo3
GAZ CYLINDER L203
A30A
A24B DEFROSTUNIT
A24A
FRT MODULES A48 A47
A15 HVAC CONTROL
A55 DASH MODULE
L193 12V POWER OUTLET
C360 B/U MONITOR
R.H. SW. PANEL
L95ALH FOG LT
L95BLH FOG LT
C7 ACB
R23 WIPER RELAY
C48PARKBRK PRESS SW
SW120 DRIV SEAT
C88 069752
STOP PRESS. SW. SE19
FRONT BRAKE AIR PRESSURE Se53
REAR BRAKE AIR PRESSURE Se54
ACC AIR PRESSURE Se55
A4 RESISTANCE MODULE
A5 RESISTANCE MODULE
A2 SHIFTER
A3 066210
HAND LEVER RETARDER
2 PSI BRK (RET.)
4 PSI BRK (RET.)
7 PSI BRK (RET.) 068590
SLIDE OUT
CS01S SLIDE OUT
CS01 SLIDE OUT
069667
068342
C554 AW WINDO
C84 LUG LOCK
069441(HOR) 069435(VERT) 069437(7PIVOTS) LUGG LOCK
L183 LUG. LT
C553 AWNING WINDOW
L181 LUG. LT
L68 RH CENT. FLASHER
L67 RH CENT. MARKER
C86 LUG LOCK
L179 LUG. LT
C552 LUGG LOCK
Sw48 DOOR SW
067559
C555 AW WINDO
C81 LUG LOCK
L182 LUG. LT
C83 LUGG LOCK
L180 LUG. LT
L70 LH CENT. FLASHER
L69 LH CENT. MARKER
C85 LUGG LOCK
L178 LUG. LT
C557 AWNING WINDOW
L288 EVAP LT
C77 EVAP LOCK
C558 WINDOW
L76
C556 AWNING WINDOW
C559 AWNING WINDOW
C91 LUGG LOCK
Sw45 DOOR SWITCH
PASS LIQ VALVE So11
DOOR SWITCH Sw128
C24 FREON FILL UP
C152 066221 FUEL TANK GA.
L287 CONDENSOR LT
C75 COND LOCK
Sw7 DOOR SWITCH
C551 AWNING WINDOW
C290 LUGG LOCK
L177 LUG. LT
Sw46 DOOR SWITCH
C550 AWNING WINDOW
ACM A137
B142 UREA TANK
A138 UREA PUMP
Y81 HEATING VALVE
Res31 HOSE HEATING
Res32 HOSE HEATING
069502
C26A C26 C26B
C15
C100
C28 CAN
Se25 PASS SENS
LIQ. SOL. 069668
C35 C35A C35B C35C 069530
R10,R12 R20,R26 D8-A54 C9,C14 C23
TermMo9 EVAP. CTRL
Mo12 WATER PUMP
Mo7
So13 WATER VALVE
Mo8
OutSide Sensor Se20
Mo27
DAMPER L205
Mo28
HVAC Pwr
To Breakers
C22
C3
C21A
C21B
C27
C193
Sw82
069620
C91
L94 RH DOCKING LT
L76 RH RR SIDE FLASHER
L74 RH RR SIDE MARKER
So34 CAMERA DOOR SOLENOID
C78 FUEL FILTER
L173 ENGINE CPT LT
Y80 UREA INJECTOR
C64 069503
B115 PRESSURE SENSOR
T3 TEMP SENSOR
T1 TEMP SENSOR
T2 TEMP SENSOR
B96 DPF NOX SENSOR
C119A 067860 REAR ACCESS DOOR
C120A 067858 ENGINE DOOR
CT2 TRAILER PACKAGE
C342 RR START SW/ENGINE COMPT LTS SW
Sw58 RR CTRL START SW.
L187 BACKUP ALARM
C228A 069210(Small AC)
So9 A/C COMP. CLUTCH
Se24 A/C PRESSURE LOW SIDE
Se23 A/C PRESSURE HI-SIDE
Se29 A/C HIGH PRESSURE SW
L199 UNLOADER RH
L200 UNLOADER LH
Se30 ENGINE COMPT DOOR SW LH
Se31 ENGINE COMPT DOOR SW RH
C426 RADIATOR FAN CLUTCH
Se13 COOLANT LEVEL PROBE
L174 ENGINE COMPT LT
C10 069648
L84
L85LH RR SIDE MARKER
L86
NOX SENSOR SCR
Res18 END OF LINE RESISTOR
L72 LH RR SIDE MARKER
L75 LH RR SIDE FLASHER
L93 LH DOCKING LT
C20A FIRE DETECTOR
C20B FIRE DETECTOR
L282 FIRE EXTINGHISHER
C54
A131A OPTION KIDDE FLAME DETEC
OR
A131B
069738 RES15
BLOCK HEATER
120VAC INLET 068723
ENGINE
069655
C397
BOSCH ALT*1
BOSCH ALT*2 (OPTION)
C228 061487 COMPRE BITZER FULL AC
069666 (Breakers Harn.)
067960 (Equalizer)
067958 (Equa. w/8D)
066319 (Equa. w/8D)
To Front Pwr
RR. JCT. BOX
C717
A1 E.C.U. WORLD TR.
069510
A7 TRANSM. MAIN. CONN.
C463
W/RET.
W/O RET.
069509
Se34 OUTPUT SPEED
Se33 RETARDER TEMP
Se36 RETARDER SOL.
Se35 ENGINE SPEED
Se32 TURBINE SPEED
069508
Se34 OUTPUT SPEED
Se35 ENGINE SPEED
Se32 TURBINE SPEED
A6 RETARDER ACCUMULATOR SOL.

CLEARANCE LTS
CLUSTER
A
B
A14
C
L303 HEADLIGHTS
Se50 OUTSIDE TEMP
L66 LH FR SIDE FLASHER
L65 LH FR SIDE MARKER
A97 TPMS
A103 STEERING
Se65 STEER SENSOR
A139 STEERING GATEWAY
L285 ANTI-THEFT
Sw1 MULTIFUNCTION SW
LEVEL LOW VALVES C172
LEVEL LOW C281
065429 066511
L.H. SW. PANEL
C171 069239 CONSOLE L.H.
069415
C224 TPMS
C380 DIAG
C617
Mo4 FOOT DAMPER
LH MIRROR RAMCO C246
L1 AIR HORN
GROUND STUD
SW44 L.H. CORNERING LT
L97 SERVICE COMPT LT
L184 WIND WASHER PUMPS
Mo18 Mo19 Mo20 Mo54 WIND WASH LEVEL
Se45 Se60 WIND HORNS
C101 HORNS
C11
ACCELERATOR FOOT PEDAL Se14B Se14A
SW120 DRIVER SEAT
C8
C6 C4 C49 C2 C2A
FRONT PWR
FR. JCT. BOX
069751
C74 C72 C71
C97
C96
C200 066512
C45
069646
So38 WATER VALVE Driver A/C unit FAN
STEER
RH SENSOR Se38 & SOLENOID So22
LH SENSOR Se37 & SOLENOID So21
So52 ATC SOL.
069014
Se66 YAW SENSOR
Se79 UNUSED
DRIVE
RH SENSOR Se40 & SOLENOID So24
LH SENSOR Se39 & SOLENOID So23
ESP REAR SECTION
RH TAG Se63
ATC SOL. TAG So27
So50
068554
Se64 LH TAG
Se46 SENSOR FOR TRAILER
066570
C279 SPEED SIGNAL
C282 CONVERTER
(STEERING CONTROL ZF)

PREVOST	WIRING DIAGRAM VIP MUX	NO: D061360	PAGE: C1	REVISION 18

WIRING DIAGRAM GLOSSARY

Abbreviation	Description	Abbreviation	Description
A	Electronic Module	T24VDF1	Terminal 24 Volt Direct Front #1
Alt	Alternator	T24VDR1	Terminal 24 Volt Direct Rear #1
Batt	Battery	T24VIF1	Terminal 24 Volt Ignition Front #1
C	Connector	T24VIR1	Terminal 24 Volt Ignition Rear #1
Can	Multiplex Network	Tab	Use for Spare wire
CB	Circuit Breaker	Term	Terminal
CECM	Multiplex Module Master	TGndF	Terminal Ground Front cmpt
Circuit ID	Circuit Number	TGndR	Terminal Ground Rear cmpt
Cond	Condensor	TTLT	TellTale Lights Module
D	Diode	VECF#	Veh. Electrical Center Front cmpt Conn number
Evap	Evaporator	VECR#	Veh. Electrical Center Rear cmpt Conn number
F	Fuse		
Fr	Front		
Hvac	Heat and A/C Controller		
I/O A	Multiplex Module Low Power		
I/O B	Multiplex Module High Power		
J1587	Drive Train Information Network		
J1939	Drive Train Control Network		
L	Lamp or Load		
Master ID	Multiplex Module Downloader		
Mo	Motor		
Pot	Potentiometer		
R	Relay		
Res	Resistor		
Rly	Relay		
Rr	Rear		
Se	Sensor		
So	Solenoid		
Spk	Speaker		
Sw	Switch		
T12VDF1	Terminal 12 Volt Direct Front #1		
T12VDR1	Terminal 12 Volt Direct Rear #1		
T12VIF1	Terminal 12 Volt Ignitiont Front #1		
T12VIR1	Terminal 12 Volt Ignition Rear #1		

CIRCUITS LIST

CircuitID	Description				
spare61	SparesEnginesAccessories				
spare62	spareABSHarness				
spare63	spareABSHarness				
spare64	Transmission_Spare				
Spare65	Transmission_Spare				
spare94	SparesRearClearanceHarness				
spare95	SparesRearClearanceHarness				
TX	TPMS				
TxD	MCMIntreface				
Up	Cluster				
WHITE	TrailerConnectorGnd				
WhtFR	TPMS				
WhtRL	TPMS				
WhtRR	TPMS				
YELLOW	TrailerFlasherLH				

CIRCUITS LIST

CircuitID	Description	CircuitID	Description	CircuitID	Description
0	GndLevelLow	0RB3	GndRearLighting	12H	Backupcolor
0A	Evap.Gnd	0RB4	GndLuggagesLock	12K	
00A	GndElectronic	0RB5	GndLuggagesLock	12K1	
00A1	GndElectronic	0RB6	GndCustomer	12KPD	
0B	GndEngineCompt	0RB7	GndAwningWindow	12VA	12vEqualizer
00B	ElectronicGndofMuxModules	0RB8	GND_ACM	12VD	12VDTOCB2
0B1	GndEnginePreheater	0RB8A	GndtoACM	12VD1	12VDFrontWake-up
00B1	GndEng.Start	0RB8B	GndtoACM	12VD2	KeylessBatteryPower
0BB	Trans.FrontAirBrake	0RC1	GndS/ACWaterpump	12VD3	12vRearwake-up
0BF	Preaheter_Fuel_Filter_GND	0RC2	GndDriverCylinder	12VD4	12V_Engine_ECU
0C	GndStarter062214	0RC3		12VDCust	12VDCustomer
0CE	GNDA48A47	0RC4	GndKeylessKeypad	12VDF	12VDtoFrontVec
00D	RJBAjarSignal	0SA1	GndAlternator	12VI	12VItoCB10
0EV1	Condensor_Gnd	0SA2	GndAlternator	12VI1	12VIofA44
0F	FJBDoorOpenSig	0V1	LuggageDoorOpenSig	12VI2	MirrorPwr
0FA1	GndofAccessoires	0V2	LuggageDoorOpenSig	12VI3	PwrOutletDrawer
0FA2	GndAuxLiqSolenoidValve	0V3	LuggageDoorOpenSig	12VI4	PwrOutletandCigarLighter
0FA4	gnd	0V4	EvaporatorLightSwitch	12VI5	12VItoVECR
0FB1	GNDBackupcamera	0V4A	Condensorlightswitch	12VI6	PwrtoModuleA50
0FB2	GndDriverWdo	0V5	LuggageDoorOpenSig	12VI7	
0FB5	GNDMuxpower	0VE	EqualizerGnd	12VI8	AirDryer
0FC1	Driverseat	0Y	ABS_Gnd	12VI9	TireMonitoringPwr
0FC4	ElectricalHorn	0Y2	GndChassisABSSol	12VI250	Preheat_Fuel_Filtr_Pwr
0FD1	GNDCustomer	0Y3	GndChassisABSSol	12VICust	12VICustomer
0FDS	Driver_Seat_Gnd	1	Transmission	12VIF	12VItoFrontVec
0FE	Flame_Detector_Gnd	2	CondensorDoorOpenSig	12VIF19	12VDdash
0FE1	GNDCustomer	2B	CondSndSpdSig	12VIZF	ZFsterringControl
0FE1A	GNDCustomer	6	DriverLightSwitch	12WUp1	12VWUptoA48
0FE1B	GNDCustomer	7	GndDriverSensor	12Wup1	12WUpFront
0FE4	Flame_Detector_Gnd	9A	EngineDoorOpenSig	12Wup2	12WUptoDash
0FE5	Gnd_AFSS	9B	EngineCmpt.Lt	12Wup3	24WupLuggageslock
0G	GndofA54	10	LuggageCmpt.LtsPwr	12WUp5	PwrtoModuleA51
0H	GroundCoolantSensor	10A	LuggageCmpt.LtsPwr	13	GndTransducer
0K		10H0	LuggageCmpt.LtsPwr	15	UpperWipInt.Signal
0KPD		10H1	LuggageCmpt.LtsPwr	15A	UpperWip.1StSpdSig
0L	KeylessModuleInput	10H2	LuggageCmpt.LtsPwr	16	Speed_signal
0L/00A	KeylessModuleInput	10H3	LuggageCmpt.LtsPwr	16A	UpperWasherPump
0PR1	GndUpperWiperMotor	10H4	LuggageCmpt.LtsPwr	17	UpperWasherSwSignal
0PR2	GndFrontClearanceLts	10HB	LuggageCmpt.LtsPwr	18	Wip.WasherLevel
0RA2	GND_RJB	10R	LuggageDoorOpenSig	18A	Slide_out
0RA3	GndWake-upRly	12	Converter	20	AirDryer
0RB1	GndCameraDoorSolenoid	12A	12VDtoR3	21	FlasherLHSig
0RB2	GndBackUpCamera	12Ecu	12v_Engine_Ecu	21A	PWERMIRROR_LED

CIRCUITS LIST

CircuitID	Description	CircuitID	Description	CircuitID	Description
21AA	FlashersRearLH	24VI12	Engine_Cmpt_Lts_Pwr	53	LowerWip.Spd1Sig
21B	CorneringLtsLH	24VIA	Cut-outPneumaticAcc	53A	ElectricalHorn
21C	GndMarkersandStopLts	24VICust	24VICustomer	53B	LowerWip.Spd2Sig
22	HazardSwSig	24VIF	24VItoFrontVEC	53C	LowerWip.IntSig
23	FlasherRHSig	24WUp1	24VWUptoA47	53D	LowerWip.WasherSwSig
23A	PWERLED_MIRROR	24Wup1	24WUpFront	53E	LowerWiper1stSpd
23AA	FrontFlasherRHSide	25	EngineRunSignal	53F	LowerWasherPump
23B	CorneringLtsRH	25A1	ExcitationSignal	53G	LowerWip1stSpd
23C	ClearanceLts	25A1D	Alternator_signal	53H	LowerWiper
24A	BoosterBlock	25A2	Alternator2Signal	53J	Air_Horn
24Alt	Resistor_Pwr_Excitation	25A4	BatteryNotChargingSig	54	MarkersCenter
24AW	Awining_Wind_Pwr	26	DriverWdoPwr	56	Sw103
24CO	24COtoSw58	26A	DriverWdo	57A	AuxiliaryWaterPump
24D	24DtoCB6	26B	DriverWdo	57L	Hi-Beam
24E	24VItoCB1	28	Flasher_LH	57R	Hi-Beam
24VA	24vEquilizer	31	UnloaderRH	57Rtn	SignalRtnHeadLtsLH
24VB2	24VEnginePreheater	31B	LowerWip1stSpd	58L	LowBeam
24VD	MasterRelayPwr	31EE	UpperWipSpd.1	58R	LowBeam
24VD1	24VD	32	Converter	58Rtn	Lamp_Modul_Gnd
24VD2	24VDtoRearVec	32A	BackupLtandalarm	59	Hi/LowBeamSignal
24VD3	24VDofCECM	32D	BackupLtandalarm	60	FogsLtsSwSig
24VD4	24VDFrontWake-up	32EE	UpperWiperMotor	61	HeadLtsSig
24VD5	PowerModuleA41	35	EntranceDoorLights	63	ClearanceLts
24VD6	24VD	35A	EntranceCeilingLight	63A	FrontClearanceLts
24VD7	PassandPRackPwr	35B	EntranceDoorLights	63AA	ClearanceLts
24VD8	UREA_Pwr_ACM	35RTN	EntranceCeilingLtGnd	63BB	ClearanceLts
24VD8A	UreaPowerACM	39	DriverLtSwSig	64A	Blinker
24VD8B	UreaPowerACM	39B	KeylessModuleOutput	65	FootDamper
24VDALT	AwiningWindowsPower	39D	DriverLt	65A	FootDamper
24VDCust	24VDCustomer	39Rtn	Driver_Light_Gnd	65D	DriverCylinder
24VDS	Driver_Seat_Pwr	40	WitnessGnd	65P	AuxiliaruLiqSolValve
24VI	24VI	41A	24VCondensor	66	MarkersSigSw2
24VI1	24VItoRearVec	41A1	PwrCondensormotors	67	EvaporatorPwr
24VI2	Multifunctionswitchpower	41A2	PwrCondensormotors	67A	CondensorPwr
24VI3	UpperWip.MotorPwr	41A3	PwrCondensormotors	68	DashDamper
24VI4	SunVisorsPwr	41A4	PwrCondensormotors	68A	DashDamper
24VI5	24VIofMuxmodules	45	Pre-HeatSigRly	69	ElectricalHorn
24VI6	PwrtoDefrostUnit	46	Marker_RH_Front	69A	HornPneumatic
24VI7	LowerWiperPower	46A	FrontMarkers	71A	DockingLtsLH
24VI8	24VItoMux	47	DoorOpenSignal	72A	DockingLtsRH
24VI9	24VIofA54	49A	DoorInsideSwCloseSig	72B	Sun_Visor
24VI9A	24VIofA54	50	WitnessGndSig	72C	Sun_Visor
24VI9B	24VIofA54	52	Sw102	72R	GndMarkersandStopLts

CIRCUITS LIST

CircuitID	Description	CircuitID	Description	CircuitID	Description
74D	Sun_Visor	91B	WitnessSigSw14	129	Sun_Visors
76	FuelLevelSig	92	TrailerParkBrakeSig	130	Sun_Visor
76C	FuelLevelSig	93	PassengerDefrostSwitchUp	131	Evaporator2ndSpd
77	TransducerHi-Side	94	PassengerDefrostSwitchDown	132	DifferentialLockSignal
77AC		95	DockingLTSwSig	132A	Level_Low
77B	PassandPRackLiquidValve	96	CorneringLTSwSig	132B	LevelLowSo30
77BA	A/CClutch	97	LowDockingLightsSwitchSignal	132C	LevelLowSo31
77C	PassandPRackLiquidValve	97A	SpecialOption	132D	LevelLowSo32
77K	CoilThermostatSignal	98	BackupCancelSwitch	132E	LevelLowPower
78	StopLightSensorSig	100L	LDW	132F	LevelLowPower
79	TranducerLow-Side	100R	LDWLeftMotor	133	Transmission
79A	StopLightSensorSig	101	Starter	134	BatteryNotChargingSig
79B	Service_brk	101A	Starter	135	Transmission
80	BrakeRedundant	101B	Starter	135A	HandLevelSig
81	HeadLtCallSw1	102	Alternator_Pwr	136	Transmission
82A	CyclopeLamp	102A	Alternator	136A	Transmission_Pwr
82B	CyclopeLamp	104	LevelLowSo28	136AA	ShifterSignal
82Low	StopRearLowerLamp	105	Fog_LH	137	Transmission
82Up	StopRearUpperLamps	105A	Fog_Light	137A	MirrorPwrSig
83	24vAccessories	105ARtn	Fog_Light_Gnd	137B	Mirrors
84	StartSigSw83	105Rtn	Fog_Light	137C	Mirrors
84A	Start_Sig_Sw83	106	Fog_Light	137D	Mirrors
84B	StartSigSw83	106A	Fog_Light	137E	Mirrors
85	24VIgnition	106Rtn		137F	Mirrors
85A	Ign-AccSignal	108	LDW	137H	Mirrors
85B	Wake-upSig	111	Transmission	137J	Mirrors
85C	PositionNormalSw58	114	BacklightPwr	137K	Mirrors
85D	RearStartPwr	114A	Backlight	137L	Mirrors
85E	RearStartSignal	115	Transmission	137M	Mirrors
85F	Engine_Start_Pwr_SW58	115A	WitnessPwr	138	ABSSensor
85G	EgnineStartPwrSw58	116	DriverLiq	138A	ABSSensor
85H	Ign-AccSignal	116A	DriverLiq	139	ABSSolenoid
85Z	Trailer_Abs_Ind	118	Transmission	140	ABSSolenoid
86	DefrostunitSpd	119	Back_up_monitor	141	ABSSolenoid
86A	PassengerDefrosterControl	120	Transmission	142	ABSSolenoid
86C	PassengerSensor	123	FireAlarm	143	ABSSensor
86Rtn	GndDefrostUnit	123A	WakeUpSignal	143A	ABSSensor
87	ESP	124A	Starter_Relay	144	ABSSensor
88	CompressorPressureSignal	124B	StarterRelay	144A	ABSSensor
89	DriverSensorSig	125	Retarder_Lamp	145	ABSSolenoid
90H	24VItoEvap	126F	LevelLowSignal	146	ABSSolenoid
90H1	Evaporator	127	Transmission	147	ABSSolenoid
91	ParkBrakeSig	128	Sun_visors	148	ABSSolenoid

CIRCUITS LIST

CircuitID	Description	CircuitID	Description	CircuitID	Description
149	ABSSensor	172	LuggageUnlockSwSig	278M	KeylessModuleInput
149A	ABSSensor	173	LuggageUnlockSwSig	280	KeylessModuleInput
150	Transmission	174	Transmission	280M	KeylessModuleInput
151	GndtoEcm	175	BackUpCamera	281	EntranceDoorLock
151A	GndToEcm	175B	BackupCamSignal	282	EntranceDoorLock
151B	GndToEcm	175D	12VIBackupcamera	283	EntranceDoorHingeSignal
151C	GndToEcm	175E	Backupcolor	283A	
151D	GroundLevelGround	176	Transmission	283B	
152	ABSRearAtcSolenoid	177	Transmission	283C	EntranceDoorHingeSignal
153	PwrOutletandCigarLighter	180	Transmission	284A	LuggagesUnlockRelays
154	Transmission	201	Upperwiper&HeadlampsWasher	284B	KeylessModuleOutput
155	TransmissionInhibitSig	202	Head_Lamp_Washer_Pump	285	LuggagesLockRelays
156A	12VItoABS	203	VannerCtr	285B	KeylessModuleOutput
157D	Bus_Abs_Ind	204	VannerCtr	285C	KeylessModuleOutput
159	Transmission	205	VannerCtr	286	EntranceDoorLock
160	TagSignal	206	VannerCtr	286A	EntranceDoorLock
161	LDW	207	VannerCtr	286B	FrontDoorLock
163	RetarderSig	208	VannerCtr	287	KeylessModuleOutput
163A	EngBrakeRetSignal	209	VannerCtr	290	GndFanClutch
163B	RetarderEnSig	210	VannerCtr	290A	GndFanClutch
164	HandLevelSig	211	VannerCtr	290Rtn	GndMarkersandStopLts
166	WitnessSigSw16	229	Auxiliarydefrost	291	FanClutch
167	ACB	229A	Auxiliarydefrost	292	FanClutch
168	ACB	231	Neutral	294	KeylessModuleOutput
170A	LuggagesLocks	231A	CrankSignal	295	GndElectronic
170B	LuggagesLocks	231B	Starter_Relay	296	RJBDoorFan
170D	Luggages_Lock_Pwr	240A	12v_Engine_Ecu	297	TransShiftDown
170E	Luggagesdoorslockrelays	240B	CPC_Supply	298	TransShiftUp
170F	LuggagesLocks	241A	PowertoEcm	341	
170G	LuggagesLocks	241B	24VoltIgnition	342	AFSS_Panel_Gnd
170K	LuggagesLocksSwitchesSignal	241C	WIF_Heater	343	Fire-EngineStopTTL
170L	LuggagesLocksSwitchesSignal	260	WindowAjarSignal	344	ExtinguisherSignal
170M	LuggagesLocksSwitchesSignal	264	AuxiliaryFanSpeedControl	345	See_H3_Design
170N	LuggagesLocksSwitchesSignal	264Rtn	AuxiliaryFanSpeedControl	346	See_H3_Design
170P	LuggagesLocksSwitchesSignal	270	KeylessModuleInput	346A	
170R	LuggagesLocksSwitchesSignal	272	GNDCustomer	347	Fire_Detect_Alarme
170S	LuggagesLocksSwitchesSignal	272M	KeylessModuleInput	347A	Fire_Detect_Alarme
170T	LuggagesLocksSwitchesSignal	274	KeylessModuleInput	348	See_H3_Design
170V	LuggagesLocksSwitchesSignal	274M	KeylessModuleInput	351	EngineShout-downSignal
170W	Luggages_Lock_Pwr	276	KeylessModuleInput	352	OverrideSignal
170Y	LuggagesLocks	276M	KeylessModuleInput	360	Cluster
170Z	LuggagesLocks	277	KeylessModuleKeypadLt	361	Cluster
171	LuggageUnlockSwSig	278	GNDCustomer	362	Cluster

CIRCUITS LIST

CircuitID	Description	CircuitID	Description	CircuitID	Description
363	Cluster	537	WettankPress5v	Bref2	PassengerSensor
364	Trans.FrontAirBrake	541	CruiseSetSig	BRN	KeylessModuleKeypadGnd
365	Trans.FrontAirBrake	544	CruiseOn_OffSignal	BROWN	TrailerMarkerlights
366	Trans.RearAirBrake	544A	CruiseOn-OffLed	BussBar	24VEnginePreheater
367	Trans.RearAirBrake	545	CruiseResumeSig	CC1	Converterinput1
368	AccessoriesAirPressure	583	EngineBrakeB	CC2	ConverterInput2
369	AccessoriesAirPressure	600	ABSSensor	CC3	ConverterInput3
417	ThrottlePositionSignal	600A	ABSSensor	CC4	ConverterInput4
439	12VItoCPC	601	ABSSensor	CC5	Converterinput5
439G	Steering_Pwr	601A	ABSSensor	CC6	Converterinput5
500	DDECGND	602	ABSSteering&Yawsensor	CC7	Converterinput2
501	Control_Ground_Relay	603	ABSSteering&Yawsensor	CC8	Converterinput2
502	IVSOut	604	ABSSteering&Yawsensor	CC12	Converteroutput1
504	UreaSystem	605	ABSSteering&Yawsensor	CC13	ConverterOutput3
505	UreaSystem	606	ABSPressuresensor	CC14	ConverterOutput2
506	UreaSystem	607	ABSPressuresensor	CC15	ConverterOutput4
507	UreaSystem	608	ABSPressuresensor	CC16	Converteroutput4
510	FastIdleSignal	610	ABSPressuresensor	CC17	ConverterOutput6
511	UreaSystem	611	AbsTagSolenoid	Cd1	ComputerSignals
512	UreaSystem	612	AbsTagSolenoid	CTS	MCMIntreface
513	UreaSystem	613	AbsTagSolenoid	Cts	ComputerSignals
515	GroundPreheaterRelay	614	ABSSteeringSolenoid	D1	UpperWiperMotor
516	UreaSystem	614A	ABSSteeringSolenoid	DL0H	
517	UreaSystem	900	J1587	DL0H1	Sparefrttorr
520	UreaSystem	901	J1587	DL0L	
521	UreaSystem	911	EmergencyCutoutRlySignal	DL0L1	Sparefrttorr
522	UreaSystem	916	5VSensorPwr	DL1H	J1939
523	UreaSystem	952	GndSensorRtn	DL1L	J1939
524C	IdleValidationSig	953	Electronic_ground_DDEC_VI	DL2H	Can2
525	UreaSystem	979	EngineBrakeA	DL2L	Can2
526	UreaSystem	980H	Hispeedfanevaporator	DL3H	DBusSignal
526A	UreaSystem	980L	lowspeedfanevaporator	DL3L	DBusSignal
526B	DPFVolvo	BLACK	TrailerBackupLights	DL7H	Subnet
526C	UreaSystem	BLK	GndKeylessKeypad	DL7L	Subnet
527	UreaSystem	BlkFR	TPMS	DL9H	J1939P
528	UreaSystem	BlkRL	TPMS	DL9L	J1939P
530	UreaSystem	BlkRR	TPMS	Down	Cluster
531	UreaSystem	BLU	KeylessModuleKeypadLt	Escape	Cluster
532	UreaSystem	BLU/YEL	KeylessModuleInput	GndA	ComputerSignals
533	Control_Ground_Relay	BLUE	TrailerconnectorABSPower	GREEN	TrailerFlasherRH
534	Control_Ground_Relay	BRef1	OutsideTemperatureSensor	LIN	Steering_Gateway
535	WettankPress5v	Bref1	PassengerSensor	N1	A41Adress
536	WettankPressOut	BRef2	OutsideTemperatureSensor	N2	A56Adress

CIRCUITS LIST

CircuitID	Description	CircuitID	Description	CircuitID	Description
N3	A56Adress	RxTx	MCMIntreface	So47	SldOutMotor2sig
N4	A57Adress	Select	Cluster	So48	SldOut2MotorSig
N5	A57Adress	Shield_PS	gndshield	So55	SecurityPinSol
N6	A43Adress	Shield_T1	gndshield	So58	SldOutMotor1Sig
N7	A44Adress	Shield_T2	gndshield	So59	SldOutMotor2sig
N8	A44Adress	Shield_T3	gndshield	So61	SldOut2SealInflat
N9	A45Adress	So1	PowerSlideOut	So62	SldOut1SignalOut
N10	A45Adress	So1A	PowerSlideOut	So63	SldOut2SignalIn
N11	A46Adress	So1B	PowerSlideOut	So64	SldOut3LimitIn
N12	A46Adress	So1C	Power_SlideOut	So65	SldOut3LimitOut
N13	A47Adress	So2	SldOutRemoteSig	So66	PowerSldOut2Sensor
N14	A47Adress	So3	SldOutInSig	So67	SldOut2StatusLed
N15	A48Adress	So4	SignalOut	So68	SldOut2RelaySig
N16	A48Adress	So5	ParkBrakeSig	So69	SldOut2RelaySig
N17	A49Adress	So6	SldOut1LimitIn	So70	SldOut2SealInflat
N18	A49Adress	So7	SldOut1LimitOut	So71	SldOut2SealDeflatSig
N19	A50Adress	SO8	PowerSldOut1Sensor	So72	SldOut2MotorSig
N20	A50Adress	So8	PowerSldOut1Sensor	So73	SldOutMotor2sig
N21	A51Adress	So9	SldOut1StatusLed	So74	SldOutMotor2sig
N22	A51Adress	So10	SldOut1RelaySig	So76	Gnd_Slide_out
N23	A52Adress	So11	SldOut2RelaySig	So76A	Slide_out
N24	A52Adress	So12	SealInflating	So76AA	Gnd
N27	A54Adress	So13	SldOut1SealDeflatSig	So82	SldOut1SignalOut
N28	A54Adress	So14	SldOut1VacumGen	So83	SldOut2SignalIn
N29	A36Adress	So16	SensorGndRtn	So84	SldOut3LimitIn
N31	A58Adress	So18	Slide_Out_Gnd	So85	SldOut3LimitOut
N32	A58Adress	So18AA	Gnd	So86	PowerSldOut2Sensor
N33	A55Address	So19	SldOutMotor1Sig	So87	SldOut2StatusLed
N34	A55Address	So20	SldOutMotor1Sig	So88	SldOut2RelaySig
N35	A59_Adress	So21	SldOutMotorSig	So89	SldOut2RelaySig
N36	A59_Adress	So31	Power_SlideOut	So90	SldOut2SealInflat
OFB3	TireMonitoringGND	So31A	GndSlideOut	So91	SldOut2SealDeflatSig
OFB5	GNDTPMS	So31AA	Gnd	So92	SldOut2MotorSig
OM	KeylessModuleKeypadGnd	So32	SldOut1SignalOut	So93	SldOutMotor2sig
ORB7	GndWindowAjar	So33	Slideout2SignalIn	So94	SldOutMotor2sig
RED	TrailerStopLights	So36	SldOut2LimitIn	So95	SldOutMotor2sig
RedFR	TPMS	So37	SldOut2LimitOut	So96	Gnd_Slide_out
RedRL	TPMS	So38	PowerSldOut2Sensor	So96A	Gnd_Slide_out
RedRR	TPMS	So39	SldOut2StatusLed	So96AA	Gnd
RTS	MCMIntreface	So40	SldOut2RelaySig	SP	ConverterVehicleSpeed
Rts	ComputerSignals	So41	SldOut2RelaySig	spare2	SparesFr-to-RearHarness
RX	TPMS	So42	SldOut2SealDeflatSig	spare3	SparesFr-to-RearHarness
RxD	MCMIntreface	So46	SldOutMotor2sig	spare4	SparesEvap.Harness

CIRCUITS LIST

CircuitID	Description	CircuitID	Description		
spare5	SparesEvap.Harness	TxD	MCMIntreface		
spare6	SparesEvap.Harness	Up	Cluster		
spare7	SparesEvap.Harness	WHITE	TrailerConnectorGnd		
spare8	SparesEvap.Harness	WhtFR	TPMS		
spare9	SparesEvap.Harness	WhtRL	TPMS		
spare17	SparesFr-to-RearHarness	WhtRR	TPMS		
spare18	SparesFr-to-RearHarness	YEL	KeylessModuleInput		
spare19	SparesFr-to-RearHarness	YELLOW	TrailerFlasherLH		
spare20	SparesClearanceLts				
spare21	SparesClearanceLts				
spare22	SparesClearanceLts				
spare23	SparesClearanceLts				
spare24	SparesClearanceLts				
spare25	SparesClearanceLts				
spare32	SparesFrontHarness				
spare33	SparesFrontHarness				
spare39	SparesDash				
spare40	SparesDash				
spare41	SparesDash				
spare42	SparesDash				
spare43	SparesDash				
spare44	SparesDash				
spare45	SparesFr-to-RearHarness				
spare46	SparesFr-to-RearHarness				
spare49	SparesEngineCradle				
spare50	SparesEngineCradle				
spare51	SparesEngineCradle				
spare52	SparesEngineCradle				
spare53	SparesEngineCradle				
spare54	SparesEngineCradle				
spare55	SparesEnginesAccessories				
spare57	SparesEnginesAccessories				
spare58	SparesEnginesAccessories				
spare59	SparesEnginesAccessories				
spare60	SparesEnginesAccessories				
spare61	SparesEnginesAccessories				
spare62	spareABSHarness				
spare63	spareABSHarness				
spare64	Transmission_Spare				
Spare65	Transmission_Spare				
spare94	SparesRearClearanceHarness				
spare95	SparesRearClearanceHarness				
TX	TPMS				

CIRCUITS LIST

CircuitID	Description	CircuitID	Description	CircuitID	Description
0A	Evap.Gnd	0RB7	GndAwningWindow	12VD3	12vRearwake-up
00A	GndElectronic	0RB8	GND_ACM	12VD4	12V_Engine_ECU
00A1	GndElectronic	0RB8B	GndtoACM	12VDCust	12VDCustomer
0B	GndEngineCompt	0RC1	GndS/ACWaterpump	12VDF	12VDtoFrontVec
00B	ElectronicGndofMuxModules	0RC2	GndDriverCylinder	12VI	12VItoCB10
0B1	GndEnginePreheater	0RC4	GndKeylessKeypad	12VI1	12VIofA44
00B1	GndEng.Start	0SA1	GndAlternator	12VI2	MirrorPwr
0BB	Trans.FrontAirBrake	0SA2	GndAlternator	12VI3	PwrOutletDrawer
0C	GndStarter062214	0V1	LuggageDoorOpenSig	12VI4	PwrOutletandCigarLighter
0CE	GNDA48A47	0V2	LuggageDoorOpenSig	12VI5	12VItoVECR
00D	RJBAjarSignal	0V3	LuggageDoorOpenSig	12VI6	PwrtoModuleA50
0EV1	Condensor_Gnd	0V4	EvaporatorLightSwitch	12VI8	AirDryer
0F	FJBDoorOpenSig	0VE	EqualizerGnd	12VI9	TireMonitoringPwr
0FA1	GndofAccessoires	0Y	ABS_Gnd	12VICust	12VICustomer
0FA2	GndAuxLiqSolenoidValve	0Y2	GndChassisABSSol	12VIF	12VItoFrontVec
0FA4	gnd	0Y3	GndChassisABSSol	12VIF19	12VDdash
0FB1	GNDBackupcamera	1	Transmission	12VIZF	ZFsterringControl
0FB2	GndDriverWdo	2/10RS	Condensorlightswitch	12WUp1	12VWUptoA48
0FB5	GNDMuxpower	2B	CondSndSpdSig	12Wup1	12WUpFront
0FC1	Driverseat	6	DriverLightSwitch	12Wup2	12WUptoDash
0FC4	ElectricalHorn	7	GndDriverSensor	12Wup3	24WupLuggageslock
0FD1	GNDCustomer	9A	EngineDoorOpenSig	12WUp5	PwrtoModuleA51
0FDS	Driver_Seat_Gnd	9B	EngineCmpt.Lt	13	GndTransducer
0FE	Flame_Detector_Gnd	10	LuggageCmpt.LtsPwr	15	UpperWipInt.Signal
0FE1	GNDCustomer	10A	LuggageCmpt.LtsPwr	15A	UpperWip.1StSpdSig
0FE1A	GNDCustomer	10ARtn	Condensorlightswitch	16	Speed_signal
0FE1B	GNDCustomer	10H0	LuggageCmpt.LtsPwr	16A	UpperWasherPump
0FE4	Flame_Detector_Gnd	10H1	LuggageCmpt.LtsPwr	17	UpperWasherSwSignal
0FE5	Gnd_AFSS	10H2	LuggageCmpt.LtsPwr	18	Wip.WasherLevel
0G	GndofA54	10H3	LuggageCmpt.LtsPwr	20	AirDryer
0H	GroundCoolantSensor	10H4	LuggageCmpt.LtsPwr	21	FlasherLHSig
0L	KeylessModuleInput	10HB	LuggageCmpt.LtsPwr	21A	PWERMIRROR_LED
0L/00A	KeylessModuleInput	10R	LuggageDoorOpenSig	21AA	FlashersRearLH
0PR1	GndUpperWiperMotor	10S	LuggageDoorOpenSig	21B	CorneringLtsLH
0PR2	GndFrontClearanceLts	12	Converter	21C	GndMarkersandStopLts
0RA2	GND_RJB	12A	12VDtoR3	22	HazardSwSig
0RA3	GndWake-upRly	12Ecu	12v_Engine_Ecu	23	FlasherRHSig
0RB1	GndCameraDoorSolenoid	12H	Backupcolor	23A	PWERLED_MIRROR
0RB2	GndBackUpCamera	12K	KeylessModule	23AA	FrontFlasherRHSide
0RB3	GndRearLighting	12VA	12vEqualizer	23B	CorneringLtsRH
0RB4	GndLuggagesLock	12VD	12VDTOCB2	23C	ClearanceLts
0RB5	GndLuggagesLock	12VD1	12VDFrontWake-up	24A	BoosterBlock
0RB6	GndCustomer	12VD2	KeylessBatteryPower	24Alt	Resistor_Pwr_Excitation

CIRCUITS LIST

CircuitID	Description	CircuitID	Description	CircuitID	Description
24AW	Awining_Wind_Pwr	28	Flasher_LH	57R	Hi-Beam
24CO	24COtoSw58	31	UnloaderRH	57Rtn	SignalRtnHeadLtsLH
24D	24DtoCB6	31B	LowerWip1stSpd	58L	LowBeam
24E	24VItoCB1	31EE	UpperWipSpd.1	58R	LowBeam
24VA	24vEquilizer	32	Converter	58Rtn	Lamp_Modul_Gnd
24VB2	24VEnginePreheater	32A	BackupLtandalarm	59	Hi/LowBeamSignal
24VD	MasterRelayPwr	32D	BackupLtandalarm	60	FogsLtsSwSig
24VD1	24VD	32EE	UpperWiperMotor	61	HeadLtsSig
24VD2	24VDtoRearVec	35	EntranceDoorLights	63	ClearanceLts
24VD3	24VDofCECM	35A	EntranceCeilingLight	63A	FrontClearanceLts
24VD4	24VDFrontWake-up	35B	EntranceDoorLights	63AA	ClearanceLts
24VD5	PowerModuleA41	35RTN	EntranceCeilingLtGnd	63BB	ClearanceLts
24VD6	24VD	39	DriverLtSwSig	64A	Blinker
24VD8	UREA_Pwr_ACM	39B	KeylessModuleOutput	65	FootDamper
24VDCust	24VDCustomer	39D	DriverLt	65A	FootDamper
24VDS	Driver_Seat_Pwr	39Rtn	Driver_Light_Gnd	65D	DriverCylinder
24VI	24VI	40	WitnessGnd	65P	AuxiliaruLiqSolValve
24VI1	24VItoRearVec	41A	24VCondensor	66	MarkersSigSw2
24VI2	Multifunctionswitchpower	41A1	PwrCondensormotors	67	EvaporatorPwr
24VI3	UpperWip.MotorPwr	41A2	PwrCondensormotors	67A	CondensorPwr
24VI4	SunVisorsPwr	41A3	PwrCondensormotors	68	DashDamper
24VI5	24VIofMuxmodules	41A4	PwrCondensormotors	68A	DashDamper
24VI6	PwrtoDefrostUnit	45	Pre-HeatSigRly	69	ElectricalHorn
24VI7	LowerWiperPower	46	Marker_RH_Front	69A	HornPneumatic
24VI8	24VItoMux	46A	FrontMarkers	71A	DockingLtsLH
24VI9	24VIofA54	47	DoorOpenSignal	72A	DockingLtsRH
24VI9A	24VIofA54	49A	DoorInsideSwCloseSig	72B	Sun_Visor
24VI9B	24VIofA54	50	WitnessGndSig	72C	Sun_Visor
24VI12	Engine_Cmpt_Lts_Pwr	52	Sw102	72R	GndMarkersandStopLts
24VIALT	AwiningWindowsPower	53	LowerWip.Spd1Sig	74D	Sun_Visor
24VICust	24VICustomer	53A	ElectricalHorn	76	FuelLevelSig
24VIF	24VItoFrontVEC	53B	LowerWip.Spd2Sig	76C	FuelLevelSig
24WUp1	24VWUptoA47	53C	LowerWip.IntSig	77	TransducerHi-Side
24Wup1	24WUpFront	53D	LowerWip.WasherSwSig	77B	PassandPRackLiquidValve
25	EngineRunSignal	53E	LowerWiper1stSpd	77BA	A/CClutch
25A	Alternator_signal	53F	LowerWasherPump	77C	PassandPRackLiquidValve
25A1	ExcitationSignal	53G	LowerWip1stSpd	77K	CoilThermostatSignal
25A1D	Alternator_signal	53H	LowerWiper	78	StopLightSensorSig
25A2	Alternator2Signal	53J	Air_Horn	79	TranducerLow-Side
25A4	BatteryNotChargingSig	54	MarkersCenter	79A	StopLightSensorSig
26	DriverWdoPwr	56	Sw103	79B	Service_brk
26A	DriverWdo	57A	AuxiliaryWaterPump	80	BrakeRedundant
26B	DriverWdo	57L	Hi-Beam	81	HeadLtCallSw1

CIRCUITS LIST

CircuitID	Description	CircuitID	Description	CircuitID	Description
82A	CyclopeLamp	102A	Alternator	136AA	ShifterSignal
82B	CyclopeLamp	104	LevelLowSo28	137	Transmission
82Low	StopRearLowerLamp	105	Fog_LH	137A	MirrorPwrSig
82Up	StopRearUpperLamps	105A	Fog_Light	137B	Mirrors
83	24vAccessories	105ARtn	Fog_Light_Gnd	137C	Mirrors
84	StartSigSw83	105Rtn	Fog_Light	137D	Mirrors
84A	Start_Sig_Sw83	106	Fog_Light	137E	Mirrors
84B	StartSigSw83	106A	Fog_Light	137F	Mirrors
85	24VIgnition	108	LDW	137H	Mirrors
85A	Ign-AccSignal	111	Transmission	137J	Mirrors
85B	Wake-upSig	114	BacklightPwr	137K	Mirrors
85C	PositionNormalSw58	114A	Backlight	137L	Mirrors
85D	RearStartPwr	115	Transmission	137M	Mirrors
85E	RearStartSignal	115A	WitnessPwr	138	ABSSensor
85F	Engine_Start_Pwr_SW58	116	DriverLiq	138A	ABSSensor
85G	EgnineStartPwrSw58	116A	DriverLiq	139	ABSSolenoid
85H	Ign-AccSignal	118	Transmission	140	ABSSolenoid
85Z	Trailer_Abs_Ind	119	Back_up_monitor	141	ABSSolenoid
86	DefrostunitSpd	120	Transmission	142	ABSSolenoid
86A	PassengerDefrosterControl	123	FireAlarm	143	ABSSensor
86C	PassengerSensor	123A	WakeUpSignal	143A	ABSSensor
86Rtn	GndDefrostUnit	124A	Starter_Relay	144	ABSSensor
87	ESP	124B	StarterRelay	144A	ABSSensor
88	CompressorPressureSignal	125	Retarder_Lamp	145	ABSSolenoid
89	DriverSensorSig	126F	LevelLowSignal	146	ABSSolenoid
90H	24VItoEvap	127	Transmission	147	ABSSolenoid
90H1	Evaporator	128	Sun_visors	148	ABSSolenoid
91	ParkBrakeSig	129	Sun_Visors	149	ABSSensor
91B	WitnessSigSw14	130	Sun_Visor	149A	ABSSensor
92	TrailerParkBrakeSig	131	Evaporator2ndSpd	150	Transmission
93	PassengerDefrostSwitchUp	132	DifferentialLockSignal	151	GndtoEcm
94	PassengerDefrostSwitchDown	132A	Level_Low	151A	GndToEcm
95	DockingLTSwSig	132B	LevelLowSo30	151B	GndToEcm
96	CorneringLTSwSig	132C	LevelLowSo31	151C	GndToEcm
97	LowDockingLightsSwitchSignal	132D	LevelLowSo32	151D	GroundLevelGround
97A	SpecialOption	132E	LevelLowPower	152	ABSRearAtcSolenoid
98	BackupCancelSwitch	132F	LevelLowPower	153	LDWPower
100L	LDW	133	Transmission	154	Transmission
100R	LDWLeftMotor	134	BatteryNotChargingSig	155	TransmissionInhibitSig
101	Starter	135	Transmission	156A	12VItoABS
101A	Starter	135A	HandLevelSig	157D	Bus_Abs_Ind
101B	Starter	136	Transmission	159	Transmission
102	Alternator_Pwr	136A	Transmission_Pwr	160	TagSignal

CIRCUITS LIST

CircuitID	Description	CircuitID	Description	CircuitID	Description
161	LDW	207	VannerCtr	290	GndFanClutch
163	RetarderSig	208	VannerCtr	290A	GndFanClutch
163A	EngBrakeRetSignal	209	VannerCtr	290Rtn	GndMarkersandStopLts
163B	RetarderEnSig	210	VannerCtr	291	FanClutch
164	HandLevelSig	211	VannerCtr	292	FanClutch
166	WitnessSigSw16	229	Auxiliarydefrost	294	KeylessModuleOutput
167	ACB	229A	Auxiliarydefrost	295	GndElectronic
168	ACB	231	Neutral	296	RJBDoorFan
170A	LuggagesLocks	231A	CrankSignal	297	TransShiftDown
170B	LuggagesLocks	231B	Starter_Relay	298	TransShiftUp
170D	Luggages_Lock_Pwr	240A	12v_Engine_Ecu	342	AFSS_Panel_Gnd
170E	Luggagesdoorslockrelays	240B	CPC_Supply	343	Fire-EngineStopTTL
170F	LuggagesLocks	241A	PowertoEcm	344	ExtinguisherSignal
170G	LuggagesLocks	241B	24VoltIgnition	345	See_H3_Design
170K	LuggagesLocksSwitchesSignal	241C	WIF_Heater	346	See_H3_Design
170L	LuggagesLocksSwitchesSignal	260	WindowAjarSignal	347	Fire_Detect_Alarme
170M	LuggagesLocksSwitchesSignal	264	AuxiliaryFanSpeedControl	347A	Fire_Detect_Alarme
170N	LuggagesLocksSwitchesSignal	264Rtn	AuxiliaryFanSpeedControl	348	See_H3_Design
170P	LuggagesLocksSwitchesSignal	270	KeylessModuleInput	351	EngineShout-downSignal
170R	LuggagesLocksSwitchesSignal	272	GNDCustomer	352	OverrideSignal
170S	LuggagesLocksSwitchesSignal	272M	KeylessModuleInput	360	Cluster
170T	LuggagesLocksSwitchesSignal	274	KeylessModuleInput	361	Cluster
170V	LuggagesLocksSwitchesSignal	274M	KeylessModuleInput	362	Cluster
170W	Luggages_Lock_Pwr	276	KeylessModuleInput	363	Cluster
170Y	LuggagesLocks	276M	KeylessModuleInput	364	Trans.FrontAirBrake
170Z	LuggagesLocks	277	KeylessModuleKeypadLt	365	Trans.FrontAirBrake
171	LuggageUnlockSwSig	278	GNDCustomer	366	Trans.RearAirBrake
172	LuggageUnlockSwSig	278M	KeylessModuleInput	367	Trans.RearAirBrake
173	LuggageUnlockSwSig	280	KeylessModuleInput	368	AccessoriesAirPressure
174	Transmission	280M	KeylessModuleInput	369	AccessoriesAirPressure
175	BackUpCamera	281	EntranceDoorLock	417	ThrottlePositionSignal
175B	BackupCamSignal	282	EntranceDoorLock	439	12VI
175D	12VIBackupcamera	283	EntranceDoorHingeSignal	439G	Steering_Pwr
175E	Backupcolor	283C	EntranceDoorHingeSignal	500	DDECGND
176	Transmission	284A	LuggagesUnlockRelays	501	Control_Ground_Relay
177	Transmission	284B	KeylessModuleOutput	502	IVSOut
180	Transmission	285	LuggagesLockRelays	504	UreaSystem
201	Upperwiper&HeadlampsWasher	285B	KeylessModuleOutput	505	UreaSystem
202	Head_Lamp_Washer_Pump	285C	KeylessModuleOutput	506	DPFVolvo
203	VannerCtr	286	EntranceDoorLock	507	DPFVolvo
204	VannerCtr	286A	EntranceDoorLock	510	FastIdleSignal
205	VannerCtr	286B	FrontDoorLock	511	UreaSystem
206	VannerCtr	287	KeylessModuleOutput	512	UreaSystem

CIRCUITS LIST

CircuitID	Description	CircuitID	Description	CircuitID	Description
513	UreaSystem	613	AbsTagSolenoid	CC13	ConverterOutput3
515	GroundPreheaterRelay	614	ABSSteeringSolenoid	CC14	ConverterOutput2
516	UreaSystem	614A	ABSSteeringSolenoid	CC15	ConverterOutput4
517	UreaSystem	900	J1587	CC16	Converteroutput4
520	UreaSystem	901	J1587	CC17	ConverterOutput6
521	UreaSystem	911	EmergencyCutoutRlySignal	Cd1	ComputerSignals
522	UreaSystem	916	5VSensorPwr	CTS	MCMIntreface
523	UreaSystem	952	GndSensorRtn	Cts	ComputerSignals
524C	IdleValidationSig	953	Electronic_ground_DDEC_VI	D1	UpperWiperMotor
525	UreaSystem	979	EngineBrakeA	D75.A	ParkBrakeSig
526	UreaSystem	980H	Hispeedfanevaporator	DL0H1	Sparefrttorr
526A	DPFVolvo	980L	lowspeedfanevaporator	DL0L1	Sparefrttorr
526B	DPFVolvo	A56J1.7	SldOut2SealInflat	DL1H	J1939
526C	DPFVolvo	A56J1.10	SldOut2SealDeflatSig	DL1L	J1939
527	UreaSystem	A57J1.7	SldOut2SealInflat	DL2H	Can2
528	UreaSystem	A57J1.10	SldOut2SealDeflatSig	DL2L	Can2
530	UreaSystem	A58J1.7	SldOut2SealInflat	DL3H	DBusSignal
531	UreaSystem	A58J1.10	SldOut2SealDeflatSig	DL3L	DBusSignal
532	UreaSystem	Alt	Excitation_Signal	DL7H	Subnet
533	Control_Ground_Relay	BLACK	TrailerBackupLights	DL7L	Subnet
534	Control_Ground_Relay	BLK	GndKeylessKeypad	DL9H	J1939P
535	WettankPress5v	BlkFR	TPMS	DL9L	J1939P
536	WettankPressOut	BlkRL	TPMS	Down	Cluster
537	WettankPress5v	BlkRR	TPMS	Escape	Cluster
541	CruiseSetSig	BLU	KeylessModuleKeypadLt	GndA	ComputerSignals
544	CruiseOn_OffSignal	BLU/YEL	KeylessModuleInput	GREEN	TrailerFlasherRH
544A	CruiseOn-OffLed	BLUE	TrailerconnectorABSPower	LIN	Steering_Gateway
545	CruiseResumeSig	BRef1	OutsideTemperatureSensor	N1	A41Adress
583	EngineBrakeB	Bref1	PassengerSensor	N2	A41Adress
600	ABSSensor	BRef2	OutsideTemperatureSensor	N3	A42Adress
600A	ABSSensor	Bref2	PassengerSensor	N4	A42Adress
601	ABSSensor	BRN	KeylessModuleKeypadGnd	N5	A43Adress
601A	ABSSensor	BROWN	TrailerMarkerlights	N6	A43Adress
602	ABSSteering&Yawsensor	BussBar	24VEnginePreheater	N7	A44Adress
603	ABSSteering&Yawsensor	CC1	Converterinput1	N8	A44Adress
604	ABSSteering&Yawsensor	CC2	ConverterInput2	N9	A45Adress
605	ABSSteering&Yawsensor	CC3	ConverterInput3	N10	A45Adress
606	ABSPressuresensor	CC4	ConverterInput4	N11	A46Adress
607	ABSPressuresensor	CC5	Converterinput5	N12	A46Adress
608	ABSPressuresensor	CC6	Converterinput5	N13	A47Adress
610	ABSPressuresensor	CC7	Converterinput2	N14	A47Adress
611	AbsTagSolenoid	CC8	Converterinput2	N15	A48Adress
612	AbsTagSolenoid	CC12	Converteroutput1	N16	A48Adress

CIRCUITS LIST

CircuitID	Description	CircuitID	Description	CircuitID	Description
N17	A49Adress	spare9	SparesEvap.Harness	WhtRL	TPMS
N18	A49Adress	spare17	SparesFr-to-RearHarness	WhtRR	TPMS
N19	A50Adress	spare18	SparesFr-to-RearHarness	YEL	KeylessModuleInput
N20	A50Adress	spare19	SparesFr-to-RearHarness	YELLOW	TrailerFlasherLH
N21	A51Adress	spare20	SparesClearanceLts		
N22	A51Adress	spare21	SparesClearanceLts		
N23	A52Adress	spare22	SparesClearanceLts		
N24	A52Adress	spare23	SparesClearanceLts		
N27	A54Adress	spare24	SparesClearanceLts		
N28	A54Adress	spare25	SparesClearanceLts		
N29	A36Adress	spare32	SparesFrontHarness		
N31	A58Adress	spare33	SparesFrontHarness		
N32	A58Adress	spare39	SparesDash		
N33	A55Address	spare40	SparesDash		
N34	A55Address	spare41	SparesDash		
N35	A59_Adress	spare42	SparesDash		
N36	A59_Adress	spare43	SparesDash		
OFB3	TireMonitoringGND	spare44	SparesDash		
OFB5	GNDTPMS	spare45	SparesFr-to-RearHarness		
OM	KeylessModuleKeypadGnd	spare46	SparesFr-to-RearHarness		
ORB7	GndWindowAjar	spare49	SparesEngineCradle		
RED	TrailerStopLights	spare50	SparesEngineCradle		
RedFR	TPMS	spare51	SparesEngineCradle		
RedRL	TPMS	spare52	SparesEngineCradle		
RedRR	TPMS	spare53	SparesEngineCradle		
RTS	MCMIntreface	spare54	SparesEngineCradle		
Rts	ComputerSignals	spare55	SparesEnginesAccessories		
RX	TPMS	spare57	SparesEnginesAccessories		
RxD	MCMIntreface	spare58	SparesEnginesAccessories		
RxTx	MCMIntreface	spare59	SparesEnginesAccessories		
Select	Cluster	spare60	SparesEnginesAccessories		
Shield_PS	gndshield	spare61	SparesEnginesAccessories		
Shield_T1	gndshield	spare62	spareABSHarness		
Shield_T2	gndshield	spare63	spareABSHarness		
Shield_T3	gndshield	spare64	Transmission_Spare		
SP	ConverterVehicleSpeed	Spare65	Transmission_Spare		
spare2	SparesFr-to-RearHarness	spare94	SparesRearClearanceHarness		
spare3	SparesFr-to-RearHarness	spare95	SparesRearClearanceHarness		
spare4	SparesEvap.Harness	TX	TPMS		
spare5	SparesEvap.Harness	TxD	MCMIntreface		
spare6	SparesEvap.Harness	Up	Cluster		
spare7	SparesEvap.Harness	WHITE	TrailerConnectorGnd		
spare8	SparesEvap.Harness	WhtFR	TPMS		

BREAKERS LIST

No	Location	Part #	Function	Rating	Page						
CB1	RJB	562683	24VIfront	90amp	3.1						
CB2	RJB	563425	12VDFront	90amp	3.1						
CB3	RJB	562683	HVAC	90amp	3.1						
CB4	RJB	563424	WakeUpR17	70amp	3.1						
CB5	RJB	562684	24VIRear	150amp	3.1						
CB6	RJB	563424	24VDRear	70amp	3.1						
CB7	RJB	562687	24VICondensor	70amp	3.1						
CB8	RJB	562686	12VIRear	40amp	3.1						
CB9	RJB	562686	*opt*	40amp	3.1						
CB10	RJB	562687	12VIFront	70amp	3.1						
CB60	{RJBVECR}	563699	Luggage_Door_Lock	20amp	5.1						
CB61	{RJBVECR}	563699	Luggage_Door_Lock	20amp	5.1						
CB82	{FJBVECF}	564464	Lower_Wiper	20amp	4.1						

CONNECTORS LIST

No	Location	Part #	Gender				
Sw117.A	5thLuggCmpt.	560079	female				
Sw117.B	5thLuggCmpt.	560079	female				
Sw119	Dash	562763	male				
Sw120	DriverArea	562237	female				
Sw122	PassengerArea	562763	male				
Sw128.A	4thLuggCmpt	562403	female				
Sw128.B	4thLuggCmpt	562403	female				
Sw137	Dash	562763	male				
Sw153		562763	male				
SwSo1.A	SlideOut_Fr_LH	561552	female				
SwSo2	SlideOut_Rr_LH	561552	female				
SwSo3	SlideOut_Rr_RH	561552	female				
SwSo4	SlideOut_Fr_RH	561552	female				
VECF1	FJB	563186	male				
VECF2	FJB	563183	male				
VECF3	FJB	563185	male				
VECF4	FJB	563182	male				
VECF9	FJB	563448	male				
VECF10	FJB	563181	male				
VECF11	FJB	563184	male				
VECF12	FJB	563187	male				
Vecr1		563186	male				
Vecr2		563183	male				
Vecr3		563185	male				
VECR4	RJB	563182	male				
Vecr9		563448	male				
Vecr10		563181	male				
VECR11	RJB	563184	male				
VECR12	RJB	563187	male				
Y80	Engiene_Cmpt	563789	male				
Y81	Cond_Cmpt	563793	male				

CONNECTORS LIST

No	Location	Part #	Gender	No	Location	Part #	Gender
A2		563984	male	A44.J1	FJB	563133	male
A4A.A	Service_Cmpt	562428	female	A44.J2	FJB	563132	male
A4A.B	Service_Cmpt	561188	female	A44.J3	FJB	562957	male
A5A	Service_Cmpt	562428	female	A45.J1	FJB	563133	male
A6	Rear_Axle_Cmpt	562427	male	A45.J2	FJB	563132	male
A7	Rear_Axle_Cmpt	563979	male	A45.J3	FJB	562957	male
A9.Cx1		564041	female	A46.J1	FJB	563133	male
A9.Cx2		563678	male	A46.J2	FJB	563132	male
A9.Cx3		564037	female	A46.J3	FJB	562957	male
A9.Cx4		564038	female	A47.J1	RightHandConsole	563133	male
A14A.A	Dash	562766	male	A47.J2	RightHandConsole	563132	male
A14A.B	Dash	562767	male	A47.J3	RightHandConsole	562957	male
A14A.C	Dash	562765	male	A48.J1	RightHandConsole	563133	male
A15	Dash	562464	male	A48.J2	RightHandConsole	563132	male
A18	FJB	562794	male	A48.J3	RightHandConsole	562957	male
A18.J2	FJB	562650	male	A49.J1	RJB	562767	male
A24	RightHandConsole	561889	female	A49.J2	RJB	563132	male
A24.A	RightHandConsole	561890	male	A49.J3	RJB	562957	male
A24.B	RightHandConsole	561566	female	A50.J1	RJB	563133	male
A27	ServiceCmpt.	562929	male	A50.J2	RJB	563132	male
A28	ServiceCmpt.	562928	male	A50.J3	RJB	562957	male
A29	Dash	562464	male	A51.J1	RJB	563133	male
A30	RightHandConsole	561889	female	A51.J2	RJB	563132	male
A30.A	RightHandConsole	561611	male	A51.J3	RJB	562957	male
A31.J1		562780	male	A52.J1	RJB	563133	male
A31.J2		562842	male	A52.J2	RJB	563132	male
A31.J3		562464	male	A52.J3	RJB	562957	male
A31.J4		562465	male	A54.J1	Evap.Cmpt.	563133	male
A31.J5		563071	male	A54.J2	Evap.Cmpt.	563132	male
A32.A	1stLuggCmpt.	561611	male	A54.J3	Evap.Cmpt.	562957	male
A32.C	1stLuggCmpt.	561566	female	A55.J1	Dash	562767	male
A36.JA	FJB	562767	male	A55.J2	Dash	563132	male
A36.JB	FJB	562765	male	A55.J3	Dash	562957	male
A36.JC	FJB	562957	male	A56.J1	Slide-OutPanel	563133	male
A41.J1	FJB	562767	male	A56.J2	Slide-OutPanel	563132	male
A41.J2	FJB	563132	male	A56.J3	Slide-OutPanel	562957	male
A41.J3	FJB	562957	male	A57.J1	Slide-OutPanel	563133	male
A42.J1	FJB	562767	male	A57.J2	Slide-OutPanel	563132	male
A42.J2	FJB	563132	male	A57.J3	Slide-OutPanel	562957	male
A42.J3	FJB	562957	male	A58.J1	Slide-OutPanel	563133	male
A43.J1	FJB	562767	male	A58.J2	Slide-OutPanel	563132	male
A43.J2	FJB	563132	male	A58.J3	Slide-OutPanel	562957	male
A43.J3	FJB	562957	male	A59.J1	Slide-OutPanel	563133	male

CONNECTORS LIST

No	Location	Part #	Gender	No	Location	Part #	Gender
A59.J2	Slide-OutPanel	563132	male	C2	ServiceCmpt.	563580	male
A59.J3	Slide-OutPanel	562957	male	C2	ServiceCmpt.	563581	female
A60	FJB	564205	male	C2A	FJB	563580	male
A77		564547	male	C2A	FJB	563581	female
A78		562583	female	C3	RJB	563589	male
A79		562581	male	C3	RJB	563590	female
A80		562477	male	C3S	RJB	563593	male
A81A.JA	FJB	562767	male	C3S	RJB	563590	female
A81A.JB	FJB	562765	male	C4	ServiceCmpt.	563580	male
A81A.JC	FJB	562957	male	C4	ServiceCmpt.	563581	female
A96	FJB	564073	female	C5	FJB	563589	male
A97	Dash	563226	male	C5	FJB	563590	female
A100	Front_Axle_Cmpt	563758	female	C5S	FJB	563589	male
A101	Rear_Axle_Cmpt	563758	female	C5S	FJB	563590	female
A102	Rear_Axle_Cmpt	563758	female	C6	ServiceCmpt.	563582	male
A103	Dash	562070	female	C6	ServiceCmpt.	563583	female
A106		565974	male	C7	Service_Cmpt	562581	female
A115		562865	male	C7	Service_Cmpt	562583	female
A131.A	Engine_Cmpt	561782	male	C8	Service_Cmpt	563227	male
A131.B	Engine_Cmpt	561781	female	C8	Service_Cmpt	563614	female
A137A		20429843	male	C9		561986	male
A138	Cond_Cmpt	563787	male	C9		561987	female
A139	Dash	564501	male	C10	Engine_Cmpt	562581	male
Alt1D.A	Engine_Cmpt	563746	female	C10	Engine_Cmpt	562583	female
Alt1D.B	Engine_Cmpt	560815	female	C11	ServiceCmpt.	563580	male
Alt1D.C	Engine_Cmpt	564469	female	C11	ServiceCmpt.	563581	female
Alt2D.A	Engine_Cmpt	563746	female	C12	RJB	561986	male
Alt2D.B	Engine_Cmpt	560815	female	C12	RJB	561987	female
Alt2D.C	Engine_Cmpt	564469	female	C13_plug	Right_Hand_Console	563589	male
Alt3.A		563746	female	C13_socket	Right_Hand_Console	563590	female
Alt3.B		560815	female	C13S	RightHandConsole	563593	male
Alt3.C		564469	female	C13S	RightHandConsole	563590	female
B85	Engine_Cmpt	563815	male	C15	5thLuggCmpt.	561646	male
B96.J1	Engine_Cmpt	563821	male	C15	5thLuggCmpt.	561645	female
B96B	Engine_Cmpt	563823	male	C15A		563358	male
B97	Engine_Cmpt	563816	male	C15A		563359	female
B98.J1	Engine_Cmpt	563817	male	C17	RJB	561986	male
B115		563818	female	C17	RJB	561987	female
B142C		563793	male	C18	FJB	561986	male
C1	FJB	563589	male	C18	FJB	561987	female
C1	FJB	563590	female	C19	RJB	561986	male
C1S	FJB	563589	male	C19	RJB	561987	female
C1S	FJB	563590	female	C20A	Engine_Cmpt	562485	male

CONNECTORS LIST

No	Location	Part #	Gender	No	Location	Part #	Gender
C20A	Engine_Cmpt	562486	female	C54		563226	male
C20B	Engine_Cmpt	562485	male	C54		563613	female
C20B	Engine_Cmpt	562486	female	C54A		561643	male
C21A	RJB	561646	male	C54A		561642	female
C21A	RJB	561645	female	C54B		562477	male
C21B	RJB	561646	male	C54B		562479	female
C21B	RJB	561645	female	C64		563358	male
C22	RJB	561847	male	C64		563359	female
C22	RJB	561862	female	C71	FJB	561646	male
C23		561847	male	C71	FJB	561645	female
C23		561862	female	C72	ServiceCmpt.	561646	male
C24_plug	Evap.Cmpt.	561690	male	C72	ServiceCmpt.	561645	female
C24_socket	Evap.Cmpt.	561566	female	C74	ServiceCmpt.	561645	female
C26		563226	male	C74	ServiceCmpt.	561646	male
C26		563613	female	C75	4thLuggCmpt	561668	male
C26A		563358	male	C75	4thLuggCmpt	561551	female
C26A		563359	female	C77	4thLuggCmpt	561668	male
C26B		563227	male	C77	4thLuggCmpt	561551	female
C26B		563614	female	C81	1stLuggCmpt.	561668	male
C27	RJB	562005	male	C81	4thLuggCmpt	561551	female
C27	RJB	561714	female	C82	1stLuggCmpt.	561668	male
C28	5thLuggCmpt.	561637	male	C82	1stLuggCmpt.	561551	female
C28	5thLuggCmpt.	561636	female	C83	2ndLuggCmpt.	561668	male
C34	RightHandConsole	561986	male	C83	2ndLuggCmpt.	561551	female
C34	RightHandConsole	561987	female	C84	2ndLuggCmpt.	561668	male
C35		561607	male	C84	2ndLuggCmpt.	561551	female
C35		561606	female	C85	3rdLuggCmpt.	561668	male
C36	FJB	561986	male	C85	3rdLuggCmpt.	561551	female
C36	FJB	561987	female	C86	3rdLuggCmpt.	561668	male
C39A		561782	male	C86	3rdLuggCmpt.	561551	female
C39A		561781	female	C87	RearRoof	563618	male
C40	Dash	562485	male	C87	RearRoof	563616	female
C40	Dash	562486	female	C89	RearRoof	561581	male
C44_plug	FJB	561577	male	C89	RearRoof	561582	female
C44_socket	FJB	561605	female	C90A		562350	male
C45	FJB	561643	male	C90A		563764	female
C45	FJB	561642	female	C91	RJB	562285	male
C48	ServiceCmpt.	561690	male	C91	RJB	562282	female
C48	ServiceCmpt.	561566	female	C92L		561690	male
C49A	FJB	562005	male	C92L		561566	female
C49A	FJB	561714	female	C92R		561690	male
C50		561782	male	C92R		561566	female
C50		561781	female	C94_plug		563589	male

CONNECTORS LIST

No	Location	Part #	Gender	No	Location	Part #	Gender
C94_socket		563590	female	C222	FJB	562477	male
C96	FJB	561643	male	C222	FJB	562479	female
C96	FJB	561642	female	C223	FJB	563227	male
C97		561643	male	C223	FJB	563614	female
C97		561642	female	C224	Dash	561637	male
C98	Engine_Cmpt	563817	male	C224	Dash	561636	female
C98	Engine_Cmpt	563830	female	C225	FJB	562650	male
C99_plug		563589	male	C225	FJB	562649	female
C99_socket		563590	female	C226	FJB	562650	male
C100	5thLuggCmpt.	563589	male	C226	FJB	562649	female
C100	5thLuggCmpt.	563590	female	C228	EngineCmpt.	563227	male
C100A		563589	male	C228	EngineCmpt.	563614	female
C100A		563590	female	C228A		563227	male
C100S	5thLuggCmpt.	563589	male	C228A		563614	female
C100S	5thLuggCmpt.	563590	female	C246	ServiceCmpt.	563090	male
C101	ServiceCmpt.	561690	male	C246	ServiceCmpt.	563091	female
C101	ServiceCmpt.	561566	female	C266	Entrance_Door	561640	male
C102	RJB	561690	male	C266	Entrance_Door	561639	female
C102	RJB	561566	female	C269	RHConsole	563090	male
C102A		561637	male	C269	RHConsole	563091	female
C102A		561636	female	C279	FJB	562477	male
C105	FJB	562581	male	C279	FJB	562479	female
C105	FJB	562583	female	C281	LeftHandConsole	560852	male
C106_plug	FJB	562581	male	C281	LeftHandConsole	560851	female
C106_socket	FJB	562583	female	C290	5thLuggCmpt.	561668	male
C119A	Rear_Engine_Door	562581	male	C290	5thLuggCmpt.	561551	female
C119A	Rear_Engine_Door	562583	female	C291	5thLuggCmpt.	561668	male
C120A	Rear_Engine_Door	563580	male	C291	5thLuggCmpt.	561551	female
C120A	Rear_Engine_Door	563581	female	C330	FJB	561690	male
C152	CondensorCmpt.	561611	male	C330	FJB	561566	female
C152	CondensorCmpt.	561610	female	C342	EngineCmpt.	562485	male
C171	FJB	561646	male	C342	EngineCmpt.	562486	female
C171	FJB	561645	female	C360	Dash	561247	male
C172	ServiceCmpt.	561637	male	C360	Dash	561248	female
C172	ServiceCmpt.	561635	female	C380A		564222	male
C193	RJB	563589	male	C380A		564224	female
C193	RJB	563590	female	C397	RJB	562285	male
C194	FJB	563589	male	C397	RJB	562282	female
C194	FJB	563590	female	C400_plug	EngineCmpt.	561782	male
C200	FJB	561607	male	C400_socket	EngineCmpt.	561781	female
C200	FJB	561606	female	C426	Engine_Cmpt	561611	male
C200B	Engine_Cmpt	562471	male	C426	Engine_Cmpt	561610	female
C200B	Engine_Cmpt	562348	female	C463	EngineCmpt.	562570	female

CONNECTORS LIST

No	Location	Part #	Gender	No	Location	Part #	Gender
C463	EngineCmpt.	562571	male	CS01S	Slide-OutPanel	563226	male
C464A		564222	male	CS01S	Slide-OutPanel	563613	female
C464A		564224	female	CS02	Slide-OutPanel	561643	male
C550	5thLuggCmpt.	561476	male	CS02	Slide-OutPanel	561641	female
C550	5thLuggCmpt.	561477	female	CS05	Slide-OutPanel	561847	male
C551	5thLuggCmpt.	561476	male	CS05	Slide-OutPanel	561862	female
C551	5thLuggCmpt.	561477	female	CS07	Slide-OutPanel	562581	male
C552	3rdLuggCmpt.	561476	male	CS07	Slide-OutPanel	562583	female
C552	3rdLuggCmpt.	561477	female	CSo8	Slide-OutPanel	562581	male
C553	2ndLuggCmpt.	561476	male	CSo8	Slide-OutPanel	562583	female
C553	2ndLuggCmpt.	561477	female	CSo9	Slide-OutPanel	562581	male
C554	1stLuggCmpt.	561476	male	CSo9	Slide-OutPanel	562583	female
C554	1stLuggCmpt.	561477	female	CT2	EngineCmpt.	563226	male
C555	1stLuggCmpt.	561476	male	CT2	EngineCmpt.	563613	female
C555	1stLuggCmpt.	561477	female	EIA		563739	male
C556	5thLuggCmpt.	561476	male	L1	Engine_Cmpt	562485	male
C556	5thLuggCmpt.	561477	female	L16		562803	male
C557	3rdLuggCmpt.	561476	male	L17		562803	male
C557	3rdLuggCmpt.	561477	female	L18	Entrance_Door	562549	male
C558	4thLuggCmpt	561476	male	L18s.A		562549	male
C558	4thLuggCmpt	561477	female	L19	Entrance_Door	562549	male
C559	5thLuggCmpt.	561476	male	L21.A	FrontRoof	561608	female
C559	5thLuggCmpt.	561477	female	L21.B	FrontRoof	562286	male
C617	Mirror_LH	563801	male	L22.A	FrontRoof	561608	female
C617	Mirror_LH	563800	female	L22.B	FrontRoof	562286	male
C618	Mirror_RH	563801	male	L23.A	FrontRoof	561608	female
C618	Mirror_RH	563800	female	L23.B	FrontRoof	562286	male
C717	RJB	561646	male	L24.A	FrontRoof	561608	female
C717	RJB	561645	female	L24.B	FrontRoof	562286	male
C_ALT1		562477	male	L25.A	FrontRoof	561608	female
C_ALT1		562479	female	L25.B	FrontRoof	562286	male
C_ALT2		562477	male	L26.A	FrontRoof	561608	female
C_ALT2		562479	female	L26.B	FrontRoof	562286	male
CC1	ServiceCmpt.	563227	male	L27.A	FrontRoof	561608	female
CC1	ServiceCmpt.	563614	female	L27.B	FrontRoof	562286	male
CC2	ServiceCmpt.	563226	male	L63	Outside_Front_RH	562155	male
CC2	ServiceCmpt.	563613	female	L64	Outside_Front_RH	562155	male
CFA31M		562350	male	L65	Outside_Front_LH	562155	male
CFA31M		563764	female	L66	Outside_Front_LH	562155	male
CFHAC		564238	male	L67.A		562155	male
CFHF1		564560	male	L68.A		562155	male
CS01	Slide-OutPanel	563226	male	L69.A		562155	male
CS01	Slide-OutPanel	563613	female	L70.A	Outside_3rd_Lugg_Door_LH	562155	male

CONNECTORS LIST

No	Location	Part #	Gender	No	Location	Part #	Gender
L72	Rear_Vehicle	562155	male	L193.A	Dash	560488	female
L74	Rear_Vehicle	562155	male	L193.B	Dash	560488	female
L75	Rear_Vehicle	562155	male	L194.A	Dash	562019	female
L76	Rear_Engine_Door	562155	male	L194.B	Dash	560488	female
L87A.A	Rear_Roof	561608	female	L195.A	Dash	560488	female
L87A.B	Rear_Roof	562286	male	L195.B	Dash	560488	female
L88A.A	Rear_Roof	561608	female	L199		562848	male
L88A.B	Rear_Roof	562286	male	L203	RightHandConsole	561690	male
L89A.A	Rear_Roof	561608	female	L205	Evap.Cmpt.	562485	male
L89A.B	Rear_Roof	562286	male	L211	Entrance_Door	562549	male
L90A.A	Rear_Roof	561608	female	L282	Rear_Axle_Cmpt	561690	male
L90A.B	Rear_Roof	562286	male	L285	Dash	561247	male
L93.A	Rear_Vehicle	563069	female	L287	4thLuggCmpt	561247	male
L93.B	Rear_Vehicle	563069	female	L288	4thLuggCmpt	561247	male
L94.A	EngineCmpt.	563069	female	L290	Engine_Door	562565	female
L94.B	EngineCmpt.	563069	female	L291	Engine_Door	562565	female
L95A	Outside_Front_LH	562485	male	L302	Outside_Front_RH	562789	male
L95B	Outside_Front_LH	562485	male	L303	Outside_Front_LH	562789	male
L96A	Outside_Front_RH	562485	male	L350	Rr_Axle_Cmpt	562350	male
L96B	Outside_Front_RH	562485	male	L350A.A		563340	male
L97.A	Outside_Front_LH	563069	female	L350A.B		563340	male
L97.B	Outside_Front_LH	563069	female	L350A.C		562350	male
L98.A	Entrance_Door	563069	female	Mo3	Dash	561667	female
L98.B	Outside_Front_RH	563069	female	Mo4	Dash	562076	male
L173	Engine_Cmpt	563590	female	Mo7	Cond_Cmpt	563691	male
L174	Engine_Cmpt	563590	female	Mo8	Cond_Cmpt	563691	male
L175	RJB	561247	male	Mo12	Evap.Cmpt.	561690	male
L176	5thLuggCmpt.	561247	male	Mo15	Over_Head_Driver_Area	560900	female
L177	5thLuggCmpt.	561247	male	Mo16	Over_Head_Driver_Area	560900	female
L178	3rdLuggCmpt.	561247	male	Mo17	LeftHandConsole	563626	male
L179	3rdLuggCmpt.	561247	male	Mo18	Fr_Service_Door	562474	male
L180	2ndLuggCmpt.	561247	male	Mo19	Fr_Service_Door	562474	male
L181	2ndLuggCmpt.	561247	male	Mo20	Fr_Service_Door	562474	male
L182	1stLuggCmpt.	561247	male	Mo21	FrontRoof	561186	male
L183	1stLuggCmpt.	561247	male	Mo22	RightHandConsole	561186	male
L184	ServiceCmpt.	561247	male	Mo24	RightHandConsole	562348	female
L185.A	Service_Cmpt	562651	female	Mo25	RightHandConsole	562348	female
L185.B	Service_Cmpt	562290	female	Mo26A	Entrance_Door	564161	male
L186.A	Service_Cmpt	562651	female	Mo27	Cond_Cmpt	563691	male
L186.B	Service_Cmpt	562290	female	Mo28	Cond_Cmpt	563691	male
L187.A	Engine_Cmpt	561690	male	Mo37	4th_Lugg_Cmpt	564161	male
L189	Outside_Front_RH	562069	male	Mo40	1stLuggCmpt.	561477	female
L190	Outside_Front_LH	562069	male	Mo44	5th_Lugg_Cmpt	561477	female

CONNECTORS LIST

No	Location	Part #	Gender	No	Location	Part #	Gender
Mo50		561690	male	Res15	RJB	561782	male
Mo51	1stLuggCmpt.	561690	male	Res31	Cond_Cmpt	562350	male
Mo53		561248	female	Res32	Cond_Cmpt	563764	female
Mo54	Service_Cmpt	562474	male	Res53.A		563590	female
Mo55.A	Rr_RH_Slideout	561967	male	RSo1		564244	female
Mo56	5th_Lugg_Cmpt	561477	female	RSo2		564244	female
Mo57.A	Front_RH_Slideout	561967	male	RSo3		564244	female
Mo58	1st_Lugg_Cmpt	561477	female	RSo4		564244	female
Mo60		561566	female	RSo5		564244	female
Mo61		561566	female	RSo6		564244	female
Mo72		564161	male	RSo7		564244	female
MONITOR	Dash	561247	male	RSo8		564244	female
MoSo1.A	Front_LH_Slideout	561967	male	Se11.A	Cond.Cmpt.	560082	male
MOSO2.A	Rr_LH_Slideout	561967	male	Se11.B	Cond.Cmpt.	560082	male
Pot1.A	Dash	560488	female	Se11.C	Cond.Cmpt.	560082	male
Pot1.B	Dash	560488	female	Se13	Engine_Cmpt	562350	male
Pot1.C	Dash	560488	female	Se14.A	Dash	561782	male
R3	RJB	563409	male	Se14.B	Dash	561781	female
R10	Evap.Cmpt.	563409	male	Se16A.A	Entrance_Door	562651	female
R12	Evap.Cmpt.	563409	male	Se16A.B	Entrance_Door	562651	female
R17	RJB	564210	male	Se17.A	RightHandConsole	562019	female
R18	FJB	564210	male	Se17.B	RightHandConsole	562019	female
R19	FJB	564210	male	Se19	Service_Cmpt	563677	male
R21	RJB	561183	male	Se20	Evap_Cmpt	562426	male
R23	RightHandConsole	561183	male	Se21	Dash	561248	female
R24	FJB	561183	male	Se23	EngineCmpt.	563159	male
R25	RJB	561183	male	Se24	EngineCmpt.	563159	male
R29	RJB	563409	male	Se25	PassengerArea	561248	female
R30	RJB	561183	male	Se29		561566	female
R31	RJB	561183	male	Se30	Engine_Door	562877	female
R32	RJB	561183	male	Se31	Compr_Door	562877	female
R33	RJB	561183	male	Se32	EngineCmpt.	563057	male
R34	RJB	564210	male	Se33	EngineCmpt.	562856	male
R36	FJB	561183	male	Se34	EngineCmpt.	563057	male
R37	FJB	561183	male	Se35	EngineCmpt.	563057	male
R38		561183	male	Se36	Engine_Cmpt	563628	female
R41	FJB	561183	male	Se37	Front_Axle_RH	641132	female
R42	FJB	561183	male	Se38	Front_Axle	641132	female
R43	FJB	561183	male	Se39	Rear_Axle_LH	641132	female
Res3	RJB	563590	female	Se40	Rear_Axle_LH	641132	female
Res4	RightHandConsole	563590	female	Se45	ServiceCmpt.	563409	male
Res6		563593	female	Se46	AboveRearAxle	562348	female
Res7.A	FJB	563590	female	Se49	Engine_Cmpt	563677	male

CONNECTORS LIST

No	Location	Part #	Gender	No	Location	Part #	Gender
Se50	Engine_Cmpt	562426	male	Sw1.C259	Dash	561186	male
Se52.A	RightHandConsole	560488	female	Sw2	Dash	562763	male
Se52.B	RightHandConsole	560488	female	Sw3	Dash	562763	male
Se53	Service_Cmpt	563159	female	Sw4	Dash	562763	male
Se54	Service_Cmpt	563159	female	Sw5	Dash	562763	male
Se55	Service_Cmpt	563159	female	Sw6	Dash	562763	male
Se60	Service_Cmpt	563409	male	Sw7.A		562403	female
Se65		564042	female	Sw7.B		562403	female
Se67		563159	female	Sw7A		562877	female
Se69		563159	female	Sw11A	LH_Console	562763	male
SESO1	SlideOut_Panel	563159	male	Sw14	Dash	562763	male
SESO2_SESO3	SlideOut_Fr_LH	562479	female	Sw16	Dash	562763	male
SESO5_SESO6	SlideOut_Rr_LH	562479	female	Sw17	Dash	562763	male
SESO7_SESO8	SlideOut_Rr_RH	562479	female	Sw18A	Dash	562763	male
SESO9_SESO10	SlideOut_Fr_RH	562479	female	Sw24	Dash	562763	male
So7	ServiceCmpt.	561566	male	Sw35	LH_Console	562763	male
So8	ServiceCmpt.	563204	female	Sw38	LeftHandConsole	562763	male
So9		561566	female	Sw39.A	RJB	562403	female
So11	Cond.Cmpt.	561566	female	Sw39.B	RJB	562403	female
So13	Evap.Cmpt.	563204	female	Sw40	LeftHandConsole	561690	male
So21	Front_Axle_Cmpt	564046	female	Sw41	LeftHandConsole	562749	male
So22	Front_Axle_Cmpt	564046	female	Sw44.A	FJB	562403	female
So23	Rear_Axle_Cmpt	564046	female	Sw44.B	FJB	562403	female
So24	Rear_Axle_Cmpt	564046	female	Sw45.A	5thLuggCmpt.	562403	female
So26	ServiceCmpt.	641385	male	Sw45.B	5thLuggCmpt.	562403	female
So36		561690	male	Sw46.A	5thLuggCmpt.	562403	female
So38	1stLuggCmpt.	561566	female	Sw46.B	5thLuggCmpt.	562403	female
So52	Front_Axle_Cmpt	564045	female	Sw47.A	3rdLuggCmpt.	562403	female
SoSo1	SlideOut_Panel	641385	male	Sw47.B	3rdLuggCmpt.	562403	female
SoSo2	SlideOut_Panel	641385	male	Sw48.A	3rdLuggCmpt.	562403	female
SoSo3	SlideOut_Panel	641385	male	Sw48.B	3rdLuggCmpt.	562403	female
SOSO4	SlideOut_Panel	641385	male	Sw49.A	2ndLuggCmpt.	562403	female
SoSo5	SlideOut_Panel	641385	male	Sw49.B	2ndLuggCmpt.	562403	female
SoSo6	SlideOut_Panel	641385	male	Sw50.A	2ndLuggCmpt.	562403	female
SoSo7	SlideOut_Panel	564045	female	Sw50.B	2ndLuggCmpt.	562403	female
SoSo8	SlideOut_Panel	564045	female	Sw51.A	1stLuggCmpt.	562403	female
spBar4		564135	male	Sw51.B	1stLuggCmpt.	562403	female
spBar5		564135	male	Sw52.A		562403	female
spBar7		564135	male	Sw52.B		562403	female
spBar19		564135	male	Sw58	EngineCmpt.	562581	male
spBar20		564135	male	Sw59	EngineCmpt.	562485	male
spBar21		564135	male	Sw63A	LH_Console	562763	male
Sw1.C258	Dash	561188	female	Sw64.A	Service_Cmpt	560815	female

CONNECTORS LIST

No	Location	Part #	Gender	No	Location	Part #	Gender
Sw64.B	Service_Cmpt	560815	female	Term17		562228	N/A
Sw82.A	RJB	561457	female	Term18		560587	N/A
Sw82.B	RJB	561457	female	Term32		562228	N/A
Sw82.C	RJB	561457	female	Term149		{part_no560105}	N/A
Sw82.D	RJB	561457	female	Term149A		{part_no560105}	N/A
Sw83.A	Dash	560082	female	TermX00		562228	N/A
Sw83.B	Dash	560815	female	TermX01		562229	N/A
Sw83.C	Dash	560082	female	TermX02		562229	N/A
Sw83.D	Dash	560815	female	TermX03		562229	N/A
Sw85	LeftHandConsole	562749	male	TermX04		562228	N/A
Sw99	Dash	562763	male	TermX05		562229	N/A
Sw100	Dash	562763	male	TermX06		562229	N/A
Sw102	Dash	562763	male	TermX07		562229	N/A
Sw103A	LH_Console	562763	male	TermX08		562229	N/A
Sw104	Dash	562763	male	TermX09		562229	N/A
Sw106A		565908	male	VECF1	FJB	563186	male
Sw107.A	LH_Console	561457	female	VECF2	FJB	563183	male
Sw107.B	LH_Console	561457	female	VECF3	FJB	563185	male
Sw107.C	LH_Console	561457	female	VECF4	FJB	563182	male
Sw107.D	LH_Console	561457	female	VECF9	FJB	563448	male
Sw107.E	LH_Console	561457	female	VECF10	FJB	563181	male
Sw107.F	LH_Console	561457	female	VECF11	FJB	563184	male
Sw107.G	LH_Console	561457	female	VECF12	FJB	563187	male
Sw107.H	LH_Console	561457	female	Vecr1		563186	male
Sw107.J	LH_Console	561457	female	Vecr2		563183	male
Sw107.K	LH_Console	561457	female	Vecr3		563185	male
Sw108	LeftHandConsole	562763	male	VECR4	RJB	563182	male
Sw116.A	4thLuggCmpt	560079	female	Vecr9		563448	male
Sw116.B	4thLuggCmpt	560079	female	Vecr10		563181	male
Sw117.A	5thLuggCmpt.	560079	female	VECR11	RJB	563184	male
Sw117.B	5thLuggCmpt.	560079	female	VECR12	RJB	563187	male
Sw119	Dash	562763	male	Y80	Engiene_Cmpt	563789	male
Sw120	DriverArea	562237	female	Y81	Cond_Cmpt	563793	male
Sw122	PassengerArea	562763	male				
Sw128.A	4thLuggCmpt	562403	female				
Sw128.B	4thLuggCmpt	562403	female				
Sw137	Dash	562763	male				
Sw153		562763	male				
SwSo1.A	SlideOut_Fr_LH	561552	female				
SwSo2	SlideOut_Rr_LH	561552	female				
SwSo3	SlideOut_Rr_RH	561552	female				
SwSo4	SlideOut_Fr_RH	561552	female				
Term16		560587	N/A				

CONNECTORS LIST

No	Location	Part #	Gender	No	Location	Part #	Gender
A2	LH_Console	563984	male	A44.J1	FJB	563133	male
A4A.A	Service_Cmpt	562428	female	A44.J2	FJB	563132	male
A4A.B	Service_Cmpt	561188	female	A44.J3	FJB	562957	male
A5A	Service_Cmpt	562428	female	A45.J1	FJB	563133	male
A6	Rear_Axle_Cmpt	562427	male	A45.J2	FJB	563132	male
A7	Rear_Axle_Cmpt	563979	male	A45.J3	FJB	562957	male
A9.Cx1	FJB	564041	female	A46.J1	FJB	563133	male
A9.Cx2	FJB	563678	male	A46.J2	FJB	563132	male
A9.Cx3	FJB	564037	female	A46.J3	FJB	562957	male
A9.Cx4	FJB	564038	female	A47.J1	RightHandConsole	563133	male
A14A.A	Dash	562766	male	A47.J2	RightHandConsole	563132	male
A14A.B	Dash	562767	male	A47.J3	RightHandConsole	562957	male
A14A.C	Dash	562765	male	A48.J1	RightHandConsole	563133	male
A15	Dash	562464	male	A48.J2	RightHandConsole	563132	male
A18	FJB	562794	male	A48.J3	RightHandConsole	562957	male
A18.J2	FJB	562650	male	A49.J1	RJB	562767	male
A24	RightHandConsole	561889	female	A49.J2	RJB	563132	male
A24.A	RightHandConsole	561890	male	A49.J3	RJB	562957	male
A24.B	RightHandConsole	561566	female	A50.J1	RJB	563133	male
A27	ServiceCmpt.	562929	male	A50.J2	RJB	563132	male
A28	ServiceCmpt.	562928	male	A50.J3	RJB	562957	male
A29	Dash	562464	male	A51.J1	RJB	563133	male
A30	RightHandConsole	561889	female	A51.J2	RJB	563132	male
A30.A	RightHandConsole	561611	male	A51.J3	RJB	562957	male
A31.J1	Dash	562780	male	A52.J1	RJB	563133	male
A31.J2	Dash	562842	male	A52.J2	RJB	563132	male
A31.J3	Dash	562464	male	A52.J3	RJB	562957	male
A31.J4	Dash	562465	male	A54.J1	Evap.Cmpt.	563133	male
A31.J5	Dash	563071	male	A54.J2	Evap.Cmpt.	563132	male
A32.A	1stLuggCmpt.	561611	male	A54.J3	Evap.Cmpt.	562957	male
A32.C	1stLuggCmpt.	561566	female	A55.J1	Dash	562767	male
A36.JA	FJB	562767	male	A55.J2	Dash	563132	male
A36.JB	FJB	562765	male	A55.J3	Dash	562957	male
A36.JC	FJB	562957	male	A56.J1	Slide-OutPanel	563133	male
A41.J1	FJB	562767	male	A56.J2	Slide-OutPanel	563132	male
A41.J2	FJB	563132	male	A56.J3	Slide-OutPanel	562957	male
A41.J3	FJB	562957	male	A57.J1	Slide-OutPanel	563133	male
A42.J1	FJB	562767	male	A57.J2	Slide-OutPanel	563132	male
A42.J2	FJB	563132	male	A57.J3	Slide-OutPanel	562957	male
A42.J3	FJB	562957	male	A58.J1	Slide-OutPanel	563133	male
A43.J1	FJB	562767	male	A58.J2	Slide-OutPanel	563132	male
A43.J2	FJB	563132	male	A58.J3	Slide-OutPanel	562957	male
A43.J3	FJB	562957	male	A59.J1	Slide-OutPanel	563133	male

CONNECTORS LIST

No	Location	Part #	Gender	No	Location	Part #	Gender
A59.J2	Slide-OutPanel	563132	male	C2	ServiceCmpt.	563580	male
A59.J3	Slide-OutPanel	562957	male	C2	ServiceCmpt.	563581	female
A60	FJB	564205	male	C2A	FJB	563580	male
A77	RJB	564547	male	C2A	FJB	563581	female
A78	RJB	562583	female	C3	RJB	563589	male
A79	RJB	562581	male	C3	RJB	563590	female
A80	RJB	562477	male	C3S	RJB	563593	male
A81A.JA	FJB	562767	male	C3S	RJB	563590	female
A81A.JB	FJB	562765	male	C4	ServiceCmpt.	563580	male
A81A.JC	FJB	562957	male	C4	ServiceCmpt.	563581	female
A83	FJB	565970	female	C5	FJB	563589	male
A96	FJB	564073	male	C5	FJB	563590	female
A97	Dash	563226	female	C5S	FJB	563589	male
A100	Front_Axle_Cmpt	563758	female	C5S	FJB	563590	female
A101	Rear_Axle_Cmpt	563758	female	C6	ServiceCmpt.	563582	male
A102	Rear_Axle_Cmpt	563758	female	C6	ServiceCmpt.	563583	female
A103	Dash	562070	male	C7	Service_Cmpt	562581	female
A106	Entrance_Door	565974	male	C7	Service_Cmpt	562583	female
A115		562865	male	C8	Service_Cmpt	563227	male
A131.A	Engine_Cmpt	561782	female	C8	Service_Cmpt	563614	female
A131.B	Engine_Cmpt	561781	male	C9	Evap_Cmpt	561986	male
A137A	Cond_Cmpt	20429843	male	C9	Evap_Cmpt	561987	female
A138	Cond_Cmpt	563787	male	C10	Engine_Cmpt	562581	male
A139	Dash	564501	female	C10	Engine_Cmpt	562583	female
Alt1D.A	Engine_Cmpt	563746	female	C11	ServiceCmpt.	563580	male
Alt1D.B	Engine_Cmpt	560815	female	C11	ServiceCmpt.	563581	female
Alt1D.C	Engine_Cmpt	564469	female	C12	RJB	561986	male
Alt2D.A	Engine_Cmpt	563746	female	C12	RJB	561987	female
Alt2D.B	Engine_Cmpt	560815	female	C13_plug	Right_Hand_Console	563589	male
Alt2D.C	Engine_Cmpt	564469	female	C13_socket	Right_Hand_Console	563590	female
Alt3.A	Engine_Cmpt	563746	female	C13S	RightHandConsole	563593	male
Alt3.B	Engine_Cmpt	560815	female	C13S	RightHandConsole	563590	female
Alt3.C	Engine_Cmpt	564469	male	C15	5thLuggCmpt.	561646	male
B85	Engine_Cmpt	563815	male	C15	5thLuggCmpt.	561645	female
B96.J1	Engine_Cmpt	563821	male	C15A		563358	male
B96B	Engine_Cmpt	563823	male	C15A		563359	female
B97	Engine_Cmpt	563816	male	C17	RJB	561986	male
B98.J1	Engine_Cmpt	563817	female	C17	RJB	561987	female
B115	Engine_Cmpt	563818	male	C18	FJB	561986	male
C1	FJB	563589	male	C18	FJB	561987	female
C1	FJB	563590	female	C19	RJB	561986	male
C1S	FJB	563589	male	C19	RJB	561987	female
C1S	FJB	563590	female	C20A	Engine_Cmpt	562485	male

CONNECTORS LIST

No	Location	Part #	Gender	No	Location	Part #	Gender
C20A	Engine_Cmpt	562486	female	C54		563226	male
C20B	Engine_Cmpt	562485	male	C54		563613	female
C20B	Engine_Cmpt	562486	female	C54A		561643	male
C21A	RJB	561646	male	C54A		561642	female
C21A	RJB	561645	female	C54B		562477	male
C21B	RJB	561646	male	C54B		562479	female
C21B	RJB	561645	female	C64		563358	male
C22	RJB	561847	male	C64		563359	female
C22	RJB	561862	female	C71	FJB	561646	male
C23		561847	male	C71	FJB	561645	female
C23		561862	female	C72	ServiceCmpt.	561646	male
C24_plug	Evap.Cmpt.	561690	male	C72	ServiceCmpt.	561645	female
C24_socket	Evap.Cmpt.	561566	female	C74	ServiceCmpt.	561645	female
C26		563226	male	C74	ServiceCmpt.	561646	male
C26		563613	female	C75	4thLuggCmpt	561668	male
C26A		563358	male	C75	4thLuggCmpt	561551	female
C26A		563359	female	C77	4thLuggCmpt	561668	male
C26B		563227	male	C77	4thLuggCmpt	561551	female
C26B		563614	female	C81	1stLuggCmpt.	561668	male
C27	RJB	562005	male	C81	4thLuggCmpt	561551	female
C27	RJB	561714	female	C82	1stLuggCmpt.	561668	male
C28	5thLuggCmpt.	561637	male	C82	1stLuggCmpt.	561551	female
C28	5thLuggCmpt.	561636	female	C83	2ndLuggCmpt.	561668	male
C34	RightHandConsole	561986	male	C83	2ndLuggCmpt.	561551	female
C34	RightHandConsole	561987	female	C84	2ndLuggCmpt.	561668	male
C35		561607	male	C84	2ndLuggCmpt.	561551	female
C35		561606	female	C85	3rdLuggCmpt.	561668	male
C36	FJB	561986	male	C85	3rdLuggCmpt.	561551	female
C36	FJB	561987	female	C86	3rdLuggCmpt.	561668	male
C39A		561782	male	C86	3rdLuggCmpt.	561551	female
C39A		561781	female	C87	RearRoof	563618	male
C40	Dash	562485	male	C87	RearRoof	563616	female
C40	Dash	562486	female	C89	RearRoof	561581	male
C44_plug	FJB	561577	male	C89	RearRoof	561582	female
C44_socket	FJB	561605	female	C90A		562350	male
C45	FJB	561643	male	C90A		563764	female
C45	FJB	561642	female	C91	RJB	562285	male
C48	ServiceCmpt.	561690	male	C91	RJB	562282	female
C48	ServiceCmpt.	561566	female	C92L		561690	male
C49A	FJB	562005	male	C92L		561566	female
C49A	FJB	561714	female	C92R		561690	male
C50		561782	male	C92R		561566	female
C50		561781	female	C94_plug		563589	male

CONNECTORS LIST

No	Location	Part #	Gender	No	Location	Part #	Gender
C94_socket		563590	female	C222	FJB	562477	male
C96	FJB	561643	male	C222	FJB	562479	female
C96	FJB	561642	female	C223	FJB	563227	male
C97		561643	male	C223	FJB	563614	female
C97		561642	female	C224	Dash	561637	male
C98	Engine_Cmpt	563817	male	C224	Dash	561636	female
C98	Engine_Cmpt	563830	female	C225	FJB	562650	male
C99_plug		563589	male	C225	FJB	562649	female
C99_socket		563590	female	C226	FJB	562650	male
C100	5thLuggCmpt.	563589	male	C226	FJB	562649	female
C100	5thLuggCmpt.	563590	female	C228	EngineCmpt.	563227	male
C100A		563589	male	C228	EngineCmpt.	563614	female
C100A		563590	female	C228A		563227	male
C100S	5thLuggCmpt.	563589	male	C228A		563614	female
C100S	5thLuggCmpt.	563590	female	C246	ServiceCmpt.	563090	male
C101	ServiceCmpt.	561690	male	C246	ServiceCmpt.	563091	female
C101	ServiceCmpt.	561566	female	C266	Entrance_Door	561640	male
C102	RJB	561690	male	C266	Entrance_Door	561639	female
C102	RJB	561566	female	C269	RHConsole	563090	male
C102A		561637	male	C269	RHConsole	563091	female
C102A		561636	female	C279	FJB	562477	male
C105	FJB	562581	male	C279	FJB	562479	female
C105	FJB	562583	female	C281	LeftHandConsole	560852	male
C106_plug	FJB	562581	male	C281	LeftHandConsole	560851	female
C106_socket	FJB	562583	female	C290	5thLuggCmpt.	561668	male
C119A	Rear_Engine_Door	562581	male	C290	5thLuggCmpt.	561551	female
C119A	Rear_Engine_Door	562583	female	C291	5thLuggCmpt.	561668	male
C120A	Rear_Engine_Door	563580	male	C291	5thLuggCmpt.	561551	female
C120A	Rear_Engine_Door	563581	female	C330	FJB	561690	male
C152	CondensorCmpt.	561611	male	C330	FJB	561566	female
C152	CondensorCmpt.	561610	female	C342	EngineCmpt.	562485	male
C171	FJB	561646	male	C342	EngineCmpt.	562486	female
C171	FJB	561645	female	C360	Dash	561247	male
C172	ServiceCmpt.	561637	male	C360	Dash	561248	female
C172	ServiceCmpt.	561635	female	C380A		564222	male
C193	RJB	563589	male	C380A		564224	female
C193	RJB	563590	female	C397	RJB	562285	male
C194	FJB	563589	male	C397	RJB	562282	female
C194	FJB	563590	female	C400_plug	EngineCmpt.	561782	male
C200	FJB	561607	male	C400_socket	EngineCmpt.	561781	female
C200	FJB	561606	female	C426	Engine_Cmpt	561611	male
C200B	Engine_Cmpt	562471	male	C426	Engine_Cmpt	561610	female
C200B	Engine_Cmpt	562348	female	C463	EngineCmpt.	562570	female

CONNECTORS LIST

No	Location	Part #	Gender	No	Location	Part #	Gender
C463	EngineCmpt.	562571	male	CS01S	Slide-OutPanel	563226	male
C464A		564222	male	CS01S	Slide-OutPanel	563613	female
C464A		564224	female	CS02	Slide-OutPanel	561643	male
C550	5thLuggCmpt.	561476	male	CS02	Slide-OutPanel	561641	female
C550	5thLuggCmpt.	561477	female	CS05	Slide-OutPanel	561847	male
C551	5thLuggCmpt.	561476	male	CS05	Slide-OutPanel	561862	female
C551	5thLuggCmpt.	561477	female	CS07	Slide-OutPanel	562581	male
C552	3rdLuggCmpt.	561476	male	CS07	Slide-OutPanel	562583	female
C552	3rdLuggCmpt.	561477	female	CSo8	Slide-OutPanel	562581	male
C553	2ndLuggCmpt.	561476	male	CSo8	Slide-OutPanel	562583	female
C553	2ndLuggCmpt.	561477	female	CSo9	Slide-OutPanel	562581	male
C554	1stLuggCmpt.	561476	male	CSo9	Slide-OutPanel	562583	female
C554	1stLuggCmpt.	561477	female	CT2	EngineCmpt.	563226	male
C555	1stLuggCmpt.	561476	male	CT2	EngineCmpt.	563613	female
C555	1stLuggCmpt.	561477	female	EIA		563739	male
C556	5thLuggCmpt.	561476	male	L1	Engine_Cmpt	562485	male
C556	5thLuggCmpt.	561477	female	L16		562803	male
C557	3rdLuggCmpt.	561476	male	L17		562803	male
C557	3rdLuggCmpt.	561477	female	L18	Entrance_Door	562549	male
C558	4thLuggCmpt	561476	male	L18s.A		562549	male
C558	4thLuggCmpt	561477	female	L19	Entrance_Door	562549	male
C559	5thLuggCmpt.	561476	male	L21.A	FrontRoof	561608	female
C559	5thLuggCmpt.	561477	female	L21.B	FrontRoof	562286	male
C617	Mirror_LH	563801	male	L22.A	FrontRoof	561608	female
C617	Mirror_LH	563800	female	L22.B	FrontRoof	562286	male
C618	Mirror_RH	563801	male	L23.A	FrontRoof	561608	female
C618	Mirror_RH	563800	female	L23.B	FrontRoof	562286	male
C717	RJB	561646	male	L24.A	FrontRoof	561608	female
C717	RJB	561645	female	L24.B	FrontRoof	562286	male
C_ALT1		562477	male	L25.A	FrontRoof	561608	female
C_ALT1		562479	female	L25.B	FrontRoof	562286	male
C_ALT2		562477	male	L26.A	FrontRoof	561608	female
C_ALT2		562479	female	L26.B	FrontRoof	562286	male
CC1	ServiceCmpt.	563227	male	L27.A	FrontRoof	561608	female
CC1	ServiceCmpt.	563614	female	L27.B	FrontRoof	562286	male
CC2	ServiceCmpt.	563226	male	L63	Outside_Front_RH	562155	male
CC2	ServiceCmpt.	563613	female	L64	Outside_Front_RH	562155	male
CFA31M		562350	male	L65	Outside_Front_LH	562155	male
CFA31M		563764	female	L66	Outside_Front_LH	562155	male
CFHAC		564238	male	L67.A		562155	male
CFHF1		564560	male	L68.A		562155	male
CS01	Slide-OutPanel	563226	male	L69.A		562155	male
CS01	Slide-OutPanel	563613	female	L70.A	Outside_3rd_Lugg_Door_LH	562155	male

CONNECTORS LIST

No	Location	Part #	Gender	No	Location	Part #	Gender
L72	Rear_Vehicle	562155	male	L193.A	Dash	560488	female
L74	Rear_Vehicle	562155	male	L193.B	Dash	560488	female
L75	Rear_Vehicle	562155	male	L194.A	Dash	562019	female
L76	Rear_Engine_Door	562155	male	L194.B	Dash	560488	female
L87A.A	Rear_Roof	561608	female	L195.A	Dash	560488	female
L87A.B	Rear_Roof	562286	male	L195.B	Dash	560488	female
L88A.A	Rear_Roof	561608	female	L199		562848	male
L88A.B	Rear_Roof	562286	male	L203	RightHandConsole	561690	male
L89A.A	Rear_Roof	561608	female	L205	Evap.Cmpt.	562485	male
L89A.B	Rear_Roof	562286	male	L211	Entrance_Door	562549	male
L90A.A	Rear_Roof	561608	female	L282	Rear_Axle_Cmpt	561690	male
L90A.B	Rear_Roof	562286	male	L285	Dash	561247	male
L93.A	Rear_Vehicle	563069	female	L287	4thLuggCmpt	561247	male
L93.B	Rear_Vehicle	563069	female	L288	4thLuggCmpt	561247	male
L94.A	EngineCmpt.	563069	female	L290	Engine_Door	562565	female
L94.B	EngineCmpt.	563069	female	L291	Engine_Door	562565	female
L95A	Outside_Front_LH	562485	male	L302	Outside_Front_RH	562789	male
L95B	Outside_Front_LH	562485	male	L303	Outside_Front_LH	562789	male
L96A	Outside_Front_RH	562485	male	L350	Rr_Axle_Cmpt	562350	male
L96B	Outside_Front_RH	562485	male	L350A.A		563340	male
L97.A	Outside_Front_LH	563069	female	L350A.B		563340	male
L97.B	Outside_Front_LH	563069	female	L350A.C		562350	male
L98.A	Entrance_Door	563069	female	Mo3	Dash	561667	female
L98.B	Outside_Front_RH	563069	female	Mo4	Dash	562076	male
L173	Engine_Cmpt	563590	female	Mo7	Cond_Cmpt	563691	male
L174	Engine_Cmpt	563590	female	Mo8	Cond_Cmpt	563691	male
L175	RJB	561247	male	Mo12	Evap.Cmpt.	561690	male
L176	5thLuggCmpt.	561247	male	Mo15	Over_Head_Driver_Area	560900	female
L177	5thLuggCmpt.	561247	male	Mo16	Over_Head_Driver_Area	560900	female
L178	3rdLuggCmpt.	561247	male	Mo17	LeftHandConsole	563626	male
L179	3rdLuggCmpt.	561247	male	Mo18	Fr_Service_Door	562474	male
L180	2ndLuggCmpt.	561247	male	Mo19	Fr_Service_Door	562474	male
L181	2ndLuggCmpt.	561247	male	Mo20	Fr_Service_Door	562474	male
L182	1stLuggCmpt.	561247	male	Mo21	FrontRoof	561186	male
L183	1stLuggCmpt.	561247	male	Mo22	RightHandConsole	561186	male
L184	ServiceCmpt.	561247	male	Mo24	RightHandConsole	562348	female
L185.A	Service_Cmpt	562651	female	Mo25	RightHandConsole	562348	female
L185.B	Service_Cmpt	562290	female	Mo26A	Entrance_Door	564161	male
L186.A	Service_Cmpt	562651	female	Mo27	Cond_Cmpt	563691	male
L186.B	Service_Cmpt	562290	female	Mo28	Cond_Cmpt	563691	male
L187.A	Engine_Cmpt	561690	male	Mo37	4th_Lugg_Cmpt	564161	male
L189	Outside_Front_RH	562069	male	Mo40	1stLuggCmpt.	561477	female
L190	Outside_Front_LH	562069	male	Mo44	5th_Lugg_Cmpt	561477	female

CONNECTORS LIST

No	Location	Part #	Gender	No	Location	Part #	Gender
Mo50		561690	male	Res15	RJB	561782	male
Mo51	1stLuggCmpt.	561690	male	Res31	Cond_Cmpt	562350	male
Mo53		561248	female	Res32	Cond_Cmpt	563764	female
Mo54	Service_Cmpt	562474	male	Res53.A		563590	female
Mo55.A	Rr_RH_Slideout	561967	male	RSo1		564244	female
Mo56	5th_Lugg_Cmpt	561477	female	RSo2		564244	female
Mo57.A	Front_RH_Slideout	561967	male	RSo3		564244	female
Mo58	1st_Lugg_Cmpt	561477	female	RSo4		564244	female
Mo60		561566	female	RSo5		564244	female
Mo61		561566	female	RSo6		564244	female
Mo72		564161	male	RSo7		564244	female
MONITOR	Dash	561247	male	RSo8		564244	female
MoSo1.A	Front_LH_Slideout	561967	male	Se11.A	Cond.Cmpt.	560082	male
MOSO2.A	Rr_LH_Slideout	561967	male	Se11.B	Cond.Cmpt.	560082	male
Pot1.A	Dash	560488	female	Se11.C	Cond.Cmpt.	560082	male
Pot1.B	Dash	560488	female	Se13	Engine_Cmpt	562350	male
Pot1.C	Dash	560488	female	Se14.A	Dash	561782	male
R3	RJB	563409	male	Se14.B	Dash	561781	female
R10	Evap.Cmpt.	563409	male	Se16A.A	Entrance_Door	562651	female
R12	Evap.Cmpt.	563409	male	Se16A.B	Entrance_Door	562651	female
R17	RJB	564210	male	Se17.A	RightHandConsole	562019	female
R18	FJB	564210	male	Se17.B	RightHandConsole	562019	female
R19	FJB	564210	male	Se19	Service_Cmpt	563677	male
R21	RJB	561183	male	Se20	Evap_Cmpt	562426	male
R23	RightHandConsole	561183	male	Se21	Dash	561248	female
R24	FJB	561183	male	Se23	EngineCmpt.	563159	male
R25	RJB	561183	male	Se24	EngineCmpt.	563159	male
R29	RJB	563409	male	Se25	PassengerArea	561248	female
R30	RJB	561183	male	Se29		561566	female
R31	RJB	561183	male	Se30	Engine_Door	562877	female
R32	RJB	561183	male	Se31	Compr_Door	562877	female
R33	RJB	561183	male	Se32	EngineCmpt.	563057	male
R34	RJB	564210	male	Se33	EngineCmpt.	562856	male
R36	FJB	561183	male	Se34	EngineCmpt.	563057	male
R37	FJB	561183	male	Se35	EngineCmpt.	563057	male
R38		561183	male	Se36	Engine_Cmpt	563628	female
R41	FJB	561183	male	Se37	Front_Axle_RH	641132	female
R42	FJB	561183	male	Se38	Front_Axle	641132	female
R43	FJB	561183	male	Se39	Rear_Axle_LH	641132	female
Res3	RJB	563590	female	Se40	Rear_Axle_LH	641132	female
Res4	RightHandConsole	563590	female	Se45	ServiceCmpt.	563409	male
Res6		563593	female	Se46	AboveRearAxle	562348	female
Res7.A	FJB	563590	female	Se49	Engine_Cmpt	563677	male

CONNECTORS LIST

No	Location	Part #	Gender	No	Location	Part #	Gender
Se50	Engine_Cmpt	562426	male	Sw1.C259	Dash	561186	male
Se52.A	RightHandConsole	560488	female	Sw2	Dash	562763	male
Se52.B	RightHandConsole	560488	female	Sw3	Dash	562763	male
Se53	Service_Cmpt	563159	female	Sw4	Dash	562763	male
Se54	Service_Cmpt	563159	female	Sw5	Dash	562763	male
Se55	Service_Cmpt	563159	female	Sw6	Dash	562763	male
Se60	Service_Cmpt	563409	male	Sw7.A		562403	female
Se65		564042	female	Sw7.B		562403	female
Se67		563159	female	Sw7A		562877	female
Se69		563159	female	Sw11A	LH_Console	562763	male
SESO1	SlideOut_Panel	563159	male	Sw14	Dash	562763	male
SESO2_SESO3	SlideOut_Fr_LH	562479	female	Sw16	Dash	562763	male
SESO5_SESO6	SlideOut_Rr_LH	562479	female	Sw17	Dash	562763	male
SESO7_SESO8	SlideOut_Rr_RH	562479	female	Sw18A	Dash	562763	male
SESO9_SESO10	SlideOut_Fr_RH	562479	female	Sw24	Dash	562763	male
So7	ServiceCmpt.	561566	male	Sw35	LH_Console	562763	male
So8	ServiceCmpt.	563204	female	Sw38	LeftHandConsole	562763	male
So9		561566	female	Sw39.A	RJB	562403	female
So11	Cond.Cmpt.	561566	female	Sw39.B	RJB	562403	female
So13	Evap.Cmpt.	563204	female	Sw40	LeftHandConsole	561690	male
So21	Front_Axle_Cmpt	564046	female	Sw41	LeftHandConsole	562749	male
So22	Front_Axle_Cmpt	564046	female	Sw44.A	FJB	562403	female
So23	Rear_Axle_Cmpt	564046	female	Sw44.B	FJB	562403	female
So24	Rear_Axle_Cmpt	564046	female	Sw45.A	5thLuggCmpt.	562403	female
So26	ServiceCmpt.	641385	male	Sw45.B	5thLuggCmpt.	562403	female
So36		561690	male	Sw46.A	5thLuggCmpt.	562403	female
So38	1stLuggCmpt.	561566	female	Sw46.B	5thLuggCmpt.	562403	female
So52	Front_Axle_Cmpt	564045	female	Sw47.A	3rdLuggCmpt.	562403	female
SoSo1	SlideOut_Panel	641385	male	Sw47.B	3rdLuggCmpt.	562403	female
SoSo2	SlideOut_Panel	641385	male	Sw48.A	3rdLuggCmpt.	562403	female
SoSo3	SlideOut_Panel	641385	male	Sw48.B	3rdLuggCmpt.	562403	female
SOSO4	SlideOut_Panel	641385	male	Sw49.A	2ndLuggCmpt.	562403	female
SoSo5	SlideOut_Panel	641385	male	Sw49.B	2ndLuggCmpt.	562403	female
SoSo6	SlideOut_Panel	641385	male	Sw50.A	2ndLuggCmpt.	562403	female
SoSo7	SlideOut_Panel	564045	female	Sw50.B	2ndLuggCmpt.	562403	female
SoSo8	SlideOut_Panel	564045	female	Sw51.A	1stLuggCmpt.	562403	female
spBar4		564135	male	Sw51.B	1stLuggCmpt.	562403	female
spBar5		564135	male	Sw52.A		562403	female
spBar7		564135	male	Sw52.B		562403	female
spBar19		564135	male	Sw58	EngineCmpt.	562581	male
spBar20		564135	male	Sw59	EngineCmpt.	562485	male
spBar21		564135	male	Sw63A	LH_Console	562763	male
Sw1.C258	Dash	561188	female	Sw64.A	Service_Cmpt	560815	female

CONNECTORS LIST

No	Location	Part #	Gender	No	Location	Part #	Gender
Sw64.B	Service_Cmpt	560815	female	SwSo4	SlideOut_Fr_RH	561552	female
Sw82.A	RJB	561457	female	Term16		560587	N/A
Sw82.B	RJB	561457	female	Term17		562228	N/A
Sw82.C	RJB	561457	female	Term18		560587	N/A
Sw82.D	RJB	561457	female	Term32		562228	N/A
Sw83.A	Dash	560082	female	Term149		{part_no560105}	N/A
Sw83.B	Dash	560815	female	Term149A		{part_no560105}	N/A
Sw83.C	Dash	560082	female	TermX00		562228	N/A
Sw83.D	Dash	560815	female	TermX01		562229	N/A
Sw85	LeftHandConsole	562749	male	TermX02		562229	N/A
Sw99	Dash	562763	male	TermX03		562229	N/A
Sw100	Dash	562763	male	TermX04		562228	N/A
Sw102	Dash	562763	male	TermX05		562229	N/A
Sw103A	LH_Console	562763	male	TermX06		562229	N/A
Sw104	Dash	562763	male	TermX07		562229	N/A
Sw106A		565908	male	TermX08		562229	N/A
Sw107.A	LH_Console	561457	female	TermX09		562229	N/A
Sw107.B	LH_Console	561457	female	VECF1	FJB	563186	male
Sw107.C	LH_Console	561457	female	VECF2	FJB	563183	male
Sw107.D	LH_Console	561457	female	VECF3	FJB	563185	male
Sw107.E	LH_Console	561457	female	VECF4	FJB	563182	male
Sw107.F	LH_Console	561457	female	VECF9	FJB	563448	male
Sw107.G	LH_Console	561457	female	VECF10	FJB	563181	male
Sw107.H	LH_Console	561457	female	VECF11	FJB	563184	male
Sw107.J	LH_Console	561457	female	VECF12	FJB	563187	male
Sw107.K	LH_Console	561457	female	Vecr1		563186	male
Sw108	LeftHandConsole	562763	male	Vecr2		563183	male
Sw116.A	4thLuggCmpt	560079	female	Vecr3		563185	male
Sw116.B	4thLuggCmpt	560079	female	VECR4	RJB	563182	male
Sw117.A	5thLuggCmpt.	560079	female	Vecr9		563448	male
Sw117.B	5thLuggCmpt.	560079	female	Vecr10		563181	male
Sw119	Dash	562763	male	VECR11	RJB	563184	male
Sw120	DriverArea	562237	female	VECR12	RJB	563187	male
Sw122	PassengerArea	562763	male	Y80	Engiene_Cmpt	563789	male
Sw128.A	4thLuggCmpt	562403	female	Y81	Cond_Cmpt	563793	male
Sw128.B	4thLuggCmpt	562403	female				
Sw137	Dash	562763	male				
Sw153	Dash	562763	male				
Sw160	Dash	562763	male				
Sw161	Dash	562763	male				
SwSo1.A	SlideOut_Fr_LH	561552	female				
SwSo2	SlideOut_Rr_LH	561552	female				
SwSo3	SlideOut_Rr_RH	561552	female				

CONNECTORS LIST

No	Location	Part #	Gender	No	Location	Part #	Gender
A2	LH_CONSOLE	563984	male	A45.J1	FJB	563133	male
A4A.A	Service_Cmpt	562428	female	A45.J2	FJB	563132	male
A4A.B	Service_Cmpt	561188	female	A45.J3	FJB	562957	male
A5A	Service_Cmpt	562428	female	A46.J1	FJB	563133	male
A6	Rear_Axle_Cmpt	562427	male	A46.J2	FJB	563132	male
A7	Rear_Axle_Cmpt	563979	male	A46.J3	FJB	562957	male
A9.Cx1	FJB	564041	female	A47.J1	RightHandConsole	563133	male
A9.Cx2	FJB	563678	male	A47.J2	RightHandConsole	563132	male
A9.Cx3	FJB	564037	female	A47.J3	RightHandConsole	562957	male
A9.Cx4	FJB	564038	female	A48.J1	RightHandConsole	563133	male
A14A.A	Dash	562766	male	A48.J2	RightHandConsole	563132	male
A14A.B	Dash	562767	male	A48.J3	RightHandConsole	562957	male
A14A.C	Dash	562765	male	A49.J1	RJB	562767	male
A15	Dash	562464	male	A49.J2	RJB	563132	male
A18.J2	FJB	562650	male	A49.J3	RJB	562957	male
A24.A	RightHandConsole	561890	male	A50.J1	RJB	563133	male
A24.B	RightHandConsole	561566	female	A50.J2	RJB	563132	male
A27	ServiceCmpt.	562929	male	A50.J3	RJB	562957	male
A28	ServiceCmpt.	562928	male	A51.J1	RJB	563133	male
A29	Dash	562464	male	A51.J2	RJB	563132	male
A30.A	RightHandConsole	561611	male	A51.J3	RJB	562957	male
A31.J1	DASH	562780	male	A52.J1	RJB	563133	male
A31.J2	DASH	562842	male	A52.J2	RJB	563132	male
A31.J3	DASH	562464	male	A52.J3	RJB	562957	male
A31.J4	DASH	562465	male	A54.J1	Evap.Cmpt.	563133	male
A31.J5	DASH	563071	male	A54.J2	Evap.Cmpt.	563132	male
A32.A	1stLuggCmpt.	561611	male	A54.J3	Evap.Cmpt.	562957	male
A32.C	1stLuggCmpt.	561566	female	A55.J1	Dash	562767	male
A36.JA	FJB	562767	male	A55.J2	Dash	563132	male
A36.JB	FJB	562765	male	A55.J3	Dash	562957	male
A36.JC	FJB	562957	male	A56.J1	Slide-OutPanel	563133	male
A41.J1	FJB	562767	male	A56.J2	Slide-OutPanel	563132	male
A41.J2	FJB	563132	male	A56.J3	Slide-OutPanel	562957	male
A41.J3	FJB	562957	male	A57.J1	Slide-OutPanel	563133	male
A42.J1	FJB	562767	male	A57.J2	Slide-OutPanel	563132	male
A42.J2	FJB	563132	male	A57.J3	Slide-OutPanel	562957	male
A42.J3	FJB	562957	male	A58.J1	Slide-OutPanel	563133	male
A43.J1	FJB	562767	male	A58.J2	Slide-OutPanel	563132	male
A43.J2	FJB	563132	male	A58.J3	Slide-OutPanel	562957	male
A43.J3	FJB	562957	male	A77	RJB	564547	male
A44.J1	FJB	563133	male	A78	RJB	562583	female
A44.J2	FJB	563132	male	A79	RJB	562581	male
A44.J3	FJB	562957	male	A80	RJB	562477	male

CONNECTORS LIST

No	Location	Part #	Gender	No	Location	Part #	Gender
A81A.JA	FJB	562767	male	C3S	RJB	563593	male
A81A.JB	FJB	562765	male	C3S	RJB	563590	female
A81A.JC	FJB	562957	male	C4	ServiceCmpt.	563580	male
A83	FJB	565970	female	C4	ServiceCmpt.	563581	female
A96	FJB	564073	female	C5	FJB	563589	male
A97	Dash	563226	male	C5	FJB	563590	female
A100	Front_Axle_Cmpt	563758	female	C5S	FJB	563589	male
A101	Rear_Axle_Cmpt	563758	female	C5S	FJB	563590	female
A102	Rear_Axle_Cmpt	563758	female	C6	ServiceCmpt.	563582	male
A103	Dash	562070	female	C6	ServiceCmpt.	563583	female
A106	Entrance_Door	565974	male	C7	Service_Cmpt	562581	female
A115	DASH	562865	male	C7	Service_Cmpt	562583	female
A131.A	Engine_Cmpt	561782	male	C8	Service_Cmpt	563227	male
A131.B	Engine_Cmpt	561781	female	C8	Service_Cmpt	563614	female
A137A	Cond_Cmpt	20429843	male	C9	Evap_Cmpt	561986	male
A138	Cond_Cmpt	563787	male	C9	Evap_Cmpt	561987	female
A139	Dash	564501	male	C10	Engine_Cmpt	562581	male
Alt1D.A	Engine_Cmpt	563746	female	C10	Engine_Cmpt	562583	female
Alt1D.B	Engine_Cmpt	560815	female	C11	ServiceCmpt.	563580	male
Alt1D.C	Engine_Cmpt	564469	female	C11	ServiceCmpt.	563581	female
Alt2D.A	Engine_Cmpt	563746	female	C12	RJB	561986	male
Alt2D.B	Engine_Cmpt	560815	female	C12	RJB	561987	female
Alt2D.C	Engine_Cmpt	564469	female	C13_plug	Right_Hand_Console	563589	male
Alt3.A	Engine_Cmpt	563746	female	C13_socket	Right_Hand_Console	563590	female
Alt3.B	Engine_Cmpt	560815	female	C13S	RightHandConsole	563593	male
Alt3.C	Engine_Cmpt	564469	female	C13S	RightHandConsole	563590	female
B85	Engine_Cmpt	563815	male	C15	5thLuggCmpt.	561646	male
B96.J1	Engine_Cmpt	563821	male	C15	5thLuggCmpt.	561645	female
B96B	Engine_Cmpt	563823	male	C15B	5thLuggCmpt.	568110	male
B97	Engine_Cmpt	563816	male	C15B	5thLuggCmpt.	568109	female
B98.J1	Engine_Cmpt	563817	male	C17	RJB	561986	male
B115	Engine_Cmpt	563818	female	C17	RJB	561987	female
B142C	Engine_Cmpt	563793	male	C18	FJB	561986	male
C1	FJB	563589	male	C18	FJB	561987	female
C1	FJB	563590	female	C19	RJB	561986	male
C1S	FJB	563589	male	C19	RJB	561987	female
C1S	FJB	563590	female	C20A	Engine_Cmpt	562485	male
C2	ServiceCmpt.	563580	male	C20A	Engine_Cmpt	562486	female
C2	ServiceCmpt.	563581	female	C20B	Engine_Cmpt	562485	male
C2A	FJB	563580	male	C20B	Engine_Cmpt	562486	female
C2A	FJB	563581	female	C21A	RJB	561646	male
C3	RJB	563589	male	C21A	RJB	561645	female
C3	RJB	563590	female	C21B	RJB	561646	male

CONNECTORS LIST

No	Location	Part #	Gender	No	Location	Part #	Gender
C21B	RJB	561645	female	C64A	Engine.Cmpt.	568110	male
C22	RJB	561847	male	C64A	Engine.Cmpt.	568109	female
C22	RJB	561862	female	C71	FJB	561646	male
C23	Evap.Cmpt.	561847	male	C71	FJB	561645	female
C23	Evap.Cmpt.	561862	female	C72	ServiceCmpt.	561646	male
C24_plug	Evap.Cmpt.	561690	male	C72	ServiceCmpt.	561645	female
C24_socket	Evap.Cmpt.	561566	female	C74	ServiceCmpt.	561645	female
C26	Evap.Cmpt.	563226	male	C74	ServiceCmpt.	561646	male
C26	Evap.Cmpt.	563613	female	C75	Cond_Door	561515	male
C26A	Evap.Cmpt.	563358	male	C75	Cond_Door	561552	female
C26A	Evap.Cmpt.	563359	female	C77	Evap_Door	561515	male
C26AA	Evap.Cmpt.	568110	male	C77	Evap_Door	561552	female
C26AA	Evap.Cmpt.	568109	female	C81	1st_LH_Lugg_Door	561515	male
C26B	Evap.Cmpt.	563227	male	C81	1st_LH_Lugg_Door	561552	female
C26B	Evap.Cmpt.	563614	female	C82	1st_RH_Lugg_Door	561515	male
C27	RJB	562005	male	C82	1st_RH_Lugg_Door	561552	female
C27	RJB	561714	female	C83	2nd_LH_Lugg_Door	561515	male
C28	5thLuggCmpt.	561637	male	C83	2nd_LH_Lugg_Door	561552	female
C28	5thLuggCmpt.	561636	female	C84	2nd_RH_Lugg_Door	561515	male
C34	RightHandConsole	561986	male	C84	2nd_RH_Lugg_Door	561552	female
C34	RightHandConsole	561987	female	C85	3rd_LH_Lugg_Door	561515	male
C35	Evap.Cmpt.	561607	male	C85	3rd_LH_Lugg_Door	561552	female
C35	Evap.Cmpt.	561606	female	C86	3rd_RH_Lugg_Door	561515	male
C36	FJB	561986	male	C86	3rd_RH_Lugg_Door	561552	female
C36	FJB	561987	female	C87	RearRoof	563618	male
C39A	Engine.Cmpt.	561782	male	C87	RearRoof	563616	female
C39A	Engine.Cmpt.	561781	female	C89	RearRoof	561581	male
C40	Dash	562485	male	C89	RearRoof	561582	female
C40	Dash	562486	female	C91	RJB	562285	male
C44_plug	FJB	561577	male	C91	RJB	562282	female
C44_socket	FJB	561605	female	C94_plug	FJB	563589	male
C45	FJB	561643	male	C94_socket	FJB	563590	female
C45	FJB	561642	female	C96	FJB	561643	male
C49A	FJB	562005	male	C96	FJB	561642	female
C49A	FJB	561714	female	C97	FJB	561643	male
C50	RJB	561782	male	C97	FJB	561642	female
C50	RJB	561781	female	C98	Engine_Cmpt	563817	male
C54	Engine.Cmpt.	563226	male	C98	Engine_Cmpt	563830	female
C54	Engine.Cmpt.	563613	female	C99_plug	RJB	563589	male
C54A	Engine.Cmpt.	561643	male	C99_socket	RJB	563590	female
C54A	Engine.Cmpt.	561642	female	C100	5thLuggCmpt.	563589	male
C54B	Engine.Cmpt.	562477	male	C100	5thLuggCmpt.	563590	female
C54B	Engine.Cmpt.	562479	female	C100A	Evap_Cmpt	563589	male

CONNECTORS LIST

No	Location	Part #	Gender	No	Location	Part #	Gender
C100A	Evap_Cmpt	563590	female	C228	EngineCmpt.	563227	male
C100S	5thLuggCmpt.	563589	male	C228	EngineCmpt.	563614	female
C100S	5thLuggCmpt.	563590	female	C228A	EngineCmpt.	563227	male
C101	ServiceCmpt.	561690	male	C228A	EngineCmpt.	563614	female
C101	ServiceCmpt.	561566	female	C246	ServiceCmpt.	563090	male
C102	RJB	561690	male	C246	ServiceCmpt.	563091	female
C102	RJB	561566	female	C266	Entrance_Door	561640	male
C102A	RJB	561637	male	C266	Entrance_Door	561639	female
C102A	RJB	561636	female	C269	RHConsole	563090	male
C105	FJB	562581	male	C269	RHConsole	563091	female
C105	FJB	562583	female	C279	FJB	562477	male
C106_plug	FJB	562581	male	C279	FJB	562479	female
C106_socket	FJB	562583	female	C290	5nd_RH_Lugg_Door	561515	male
C110A	Pneumatic_Panel	568110	male	C290	5nd_RH_Lugg_Door	561552	female
C110A	Pneumatic_Panel	568109	female	C291	5nd_LH_Lugg_Door	561515	male
C119A	Rear_Engine_Door	562581	male	C291	5nd_LH_Lugg_Door	561552	female
C119A	Rear_Engine_Door	562583	female	C330	FJB	561690	male
C120A	Rear_Engine_Door	563580	male	C330	FJB	561566	female
C120A	Rear_Engine_Door	563581	female	C342	EngineCmpt.	562485	male
C152	CondensorCmpt.	561611	male	C342	EngineCmpt.	562486	female
C152	CondensorCmpt.	561610	female	C360	Dash	561247	male
C171	FJB	561646	male	C360	Dash	561248	female
C171	FJB	561645	female	C380A	Dash	564222	male
C172	ServiceCmpt.	561637	male	C380A	Dash	564224	female
C172	ServiceCmpt.	561635	female	C397	RJB	562285	male
C193	RJB	563589	male	C397	RJB	562282	female
C193	RJB	563590	female	C400_plug	EngineCmpt.	561782	male
C194	FJB	563589	male	C400_socket	EngineCmpt.	561781	female
C194	FJB	563590	female	C426	Engine_Cmpt	561611	male
C200	FJB	561607	male	C426	Engine_Cmpt	561610	female
C200	FJB	561606	female	C463	EngineCmpt.	562570	female
C200B	Engine_Cmpt	562471	male	C463	EngineCmpt.	562571	male
C200B	Engine_Cmpt	562348	female	C464A	RJB	564222	male
C222	FJB	562477	male	C464A	RJB	564224	female
C222	FJB	562479	female	C550	5thLuggCmpt.	561476	male
C223	FJB	563227	male	C550	5thLuggCmpt.	561477	female
C223	FJB	563614	female	C551	5thLuggCmpt.	561476	male
C224	Dash	561637	male	C551	5thLuggCmpt.	561477	female
C224	Dash	561636	female	C552	3rdLuggCmpt.	561476	male
C225	FJB	562650	male	C552	3rdLuggCmpt.	561477	female
C225	FJB	562649	female	C553	2ndLuggCmpt.	561476	male
C226	FJB	562650	male	C553	2ndLuggCmpt.	561477	female
C226	FJB	562649	female	C554	1stLuggCmpt.	561476	male

CONNECTORS LIST

No	Location	Part #	Gender	No	Location	Part #	Gender
C554	1stLuggCmpt.	561477	female	EIA	Engine_CMPT	563739	male
C555	1stLuggCmpt.	561476	male	L1	Pneumatic_Panel	562848	male
C555	1stLuggCmpt.	561477	female	L16	Front_Roof	562803	male
C556	5thLuggCmpt.	561476	male	L17	Front_Roof	562803	male
C556	5thLuggCmpt.	561477	female	L18	Entrance_Door	562549	male
C557	3rdLuggCmpt.	561476	male	L19	Entrance_Door	562549	male
C557	3rdLuggCmpt.	561477	female	L21.A	FrontRoof	561608	female
C558	4thLuggCmpt	561476	male	L21.B	FrontRoof	562286	male
C558	4thLuggCmpt	561477	female	L22.A	FrontRoof	561608	female
C559	5thLuggCmpt.	561476	male	L22.B	FrontRoof	562286	male
C559	5thLuggCmpt.	561477	female	L23.A	FrontRoof	561608	female
C617	Mirror_LH	563801	male	L23.B	FrontRoof	562286	male
C617	Mirror_LH	563800	female	L24.A	FrontRoof	561608	female
C618	Mirror_RH	563801	male	L24.B	FrontRoof	562286	male
C618	Mirror_RH	563800	female	L25.A	FrontRoof	561608	female
C717	RJB	561646	male	L25.B	FrontRoof	562286	male
C717	RJB	561645	female	L26.A	FrontRoof	561608	female
C_ALT1	Engine_Cmpt	562477	male	L26.B	FrontRoof	562286	male
C_ALT1	Engine_Cmpt	562479	female	L27.A	FrontRoof	561608	female
C_ALT2	Engine_Cmpt	562477	male	L27.B	FrontRoof	562286	male
C_ALT2	Engine_Cmpt	562479	female	L63	Outside_Front_RH	562155	male
CC1	ServiceCmpt.	563227	male	L64	Outside_Front_RH	562155	male
CC1	ServiceCmpt.	563614	female	L65	Outside_Front_LH	562155	male
CC2	ServiceCmpt.	563226	male	L66	Outside_Front_LH	562155	male
CC2	ServiceCmpt.	563613	female	L67.A	Outside_3rd_Lugg_Door_RH	562155	male
CFHAC	Evap_Cmpt	564238	male	L68.A	Outside_3rd_Lugg_Door_RH	562155	male
CFHF1	FJB	564560	male	L69.A	Outside_3rd_Lugg_Door_LH	562155	male
CS01	Slide-OutPanel	563226	male	L70.A	Outside_3rd_Lugg_Door_LH	562155	male
CS01	Slide-OutPanel	563613	female	L72	Rear_Vehicle	562155	male
CS01S	Slide-OutPanel	563226	male	L74	Rear_Vehicle	562155	male
CS01S	Slide-OutPanel	563613	female	L75	Rear_Vehicle	562155	male
CS02	Slide-OutPanel	561643	male	L76	Rear_Engine_Door	562155	male
CS02	Slide-OutPanel	561641	female	L87A.A	Rear_Roof	561608	female
CS05	Slide-OutPanel	561847	male	L87A.B	Rear_Roof	562286	male
CS05	Slide-OutPanel	561924	female	L88A.A	Rear_Roof	561608	female
CS07	Slide-OutPanel	562581	male	L88A.B	Rear_Roof	562286	male
CS07	Slide-OutPanel	562583	female	L89A.A	Rear_Roof	561608	female
CSo8	Slide-OutPanel	562581	male	L89A.B	Rear_Roof	562286	male
CSo8	Slide-OutPanel	562583	female	L90A.A	Rear_Roof	561608	female
CSo9	Slide-OutPanel	562581	male	L90A.B	Rear_Roof	562286	male
CSo9	Slide-OutPanel	562583	female	L93.A	Rear_Vehicle	563069	female
CT2	EngineCmpt.	563226	male	L93.B	Rear_Vehicle	563069	female
CT2	EngineCmpt.	563613	female	L94.A	EngineCmpt.	563069	female

CONNECTORS LIST

No	Location	Part #	Gender	No	Location	Part #	Gender
L94.B	EngineCmpt.	563069	female	L291	Engine_Door	562565	female
L95A	Outside_Front_LH	562485	male	L302	Outside_Front_RH	562789	male
L95B	Outside_Front_LH	562485	male	L303	Outside_Front_LH	562789	male
L96A	Outside_Front_RH	562485	male	L350	Rr_Axle_Cmpt	562350	male
L96B	Outside_Front_RH	562485	male	L350A.A	Rr_Axle_Cmpt	563340	male
L97.A	Outside_Front_LH	563069	female	L350A.B	Rr_Axle_Cmpt	563340	male
L97.B	Outside_Front_LH	563069	female	L350A.C	Rr_Axle_Cmpt	562350	male
L98.A	Entrance_Door	563069	female	Mo3	Dash	561667	female
L98.B	Outside_Front_RH	563069	female	Mo4	Dash	562076	male
L173	Engine_Cmpt	563590	female	Mo7	Cond_Cmpt	563691	male
L174	Engine_Cmpt	563590	female	Mo8	Cond_Cmpt	563691	male
L175	RJB	561247	male	Mo12	Evap.Cmpt.	561690	male
L176	5thLuggCmpt.	561247	male	Mo15	Over_Head_Driver_Area	560900	female
L177	5thLuggCmpt.	561247	male	Mo16	Over_Head_Driver_Area	560900	female
L178	3rdLuggCmpt.	561247	male	Mo17	LeftHandConsole	563626	male
L179	3rdLuggCmpt.	561247	male	Mo18	Fr_Service_Door	562474	male
L180	2ndLuggCmpt.	561247	male	Mo19	Fr_Service_Door	562474	male
L181	2ndLuggCmpt.	561247	male	Mo20	Fr_Service_Door	562474	male
L182	1stLuggCmpt.	561247	male	Mo21	FrontRoof	561186	male
L183	1stLuggCmpt.	561247	male	Mo22	RightHandConsole	561186	male
L184	ServiceCmpt.	561247	male	Mo24	RightHandConsole	562348	female
L185.A	Service_Cmpt	562651	female	Mo25	RightHandConsole	562348	female
L185.B	Service_Cmpt	562290	female	Mo26A	Entrance_Door	564161	male
L186.A	Service_Cmpt	562651	female	Mo27	Cond_Cmpt	563691	male
L186.B	Service_Cmpt	562290	female	Mo28	Cond_Cmpt	563691	male
L187.A	Engine_Cmpt	561690	male	Mo37	4th_Lugg_Cmpt	564161	male
L189	Outside_Front_RH	562069	male	Mo44	5th_Lugg_Cmpt	561477	female
L190	Outside_Front_LH	562069	male	Mo50	Service_Cmpt	561690	male
L193.A	Dash	560488	female	Mo51	1stLuggCmpt.	561690	male
L193.B	Dash	560488	female	Mo53	RJB	561248	female
L194.A	Dash	562019	female	Mo54	Service_Cmpt	562474	male
L194.B	Dash	560488	female	Mo55.A	Rr_RH_Slideout	561967	male
L195.A	Dash	560488	female	Mo56	5th_Lugg_Cmpt	561477	female
L195.B	Dash	560488	female	Mo58	1st_Lugg_Cmpt	561477	female
L199	Engine.Cmpt.	562848	male	Mo72	Entrance_Door	564161	male
L203	RightHandConsole	561690	male	MoSo1.A	Front_LH_Slideout	561967	male
L205	Evap.Cmpt.	562485	male	MOSO2.A	Rr_LH_Slideout	561967	male
L211	Entrance_Door	562549	male	Pot1.A	Dash	560488	female
L282	Rear_Axle_Cmpt	561690	male	Pot1.B	Dash	560488	female
L285	Dash	561247	male	Pot1.C	Dash	560488	female
L287	4thLuggCmpt	561247	male	R3	RJB	563409	male
L288	4thLuggCmpt	561247	male	R10	Evap.Cmpt.	563409	male
L290	Engine_Door	562565	female	R12	Evap.Cmpt.	563409	male

CONNECTORS LIST

No	Location	Part #	Gender	No	Location	Part #	Gender
R17	RJB	564210	male	Se24	EngineCmpt.	563159	male
R18	FJB	564210	male	Se25	PassengerArea	561248	female
R19	FJB	564210	male	Se29	Engine_Cmpt	561566	female
R21	RJB	561183	male	Se30	Engine_Door	562877	female
R23	RightHandConsole	561183	male	Se31	Compr_Door	562877	female
R24	FJB	561183	male	Se32	EngineCmpt.	563057	male
R25	RJB	561183	male	Se33	EngineCmpt.	562856	male
R29	RJB	563409	male	Se34	EngineCmpt.	563057	male
R30	RJB	564496	male	Se35	EngineCmpt.	563057	male
R31	RJB	564496	male	Se36	Engine_Cmpt	563628	female
R32	RJB	564496	male	Se37	Front_Axle_RH	641132	female
R33	RJB	564496	male	Se38	Front_Axle	641132	female
R34	RJB	564210	male	Se39	Rear_Axle_LH	641132	female
R36	FJB	561183	male	Se40	Rear_Axle_LH	641132	female
R37	FJB	561183	male	Se45	ServiceCmpt.	563409	male
R38	FJB	561183	male	Se46	AboveRearAxle	562348	female
R41	FJB	561183	male	Se49	Engine_Cmpt	563677	male
R42	FJB	561183	male	Se50	Engine_Cmpt	562426	male
R43	FJB	561183	male	Se52.A	RightHandConsole	560488	female
Res3	RJB	563590	female	Se52.B	RightHandConsole	560488	female
Res6	FJB	563593	female	Se53	Service_Cmpt	563159	female
Res7.A	FJB	563590	female	Se54	Service_Cmpt	563159	female
Res15	RJB	561782	male	Se55	Service_Cmpt	563159	female
Res19	Dash	563590	female	Se60	Service_Cmpt	563409	male
Res20	Entrance_Door	563590	female	Se65	Dash	564042	female
Res31	Cond_Cmpt	562350	male	Se67	Service_Cmpt	563159	female
Res32	Cond_Cmpt	563764	female	Se69	Service_Cmpt	563159	female
Res53.A	Dash	563590	female	SESO1	SlideOut_Panel	563159	male
Se11.A	Cond.Cmpt.	560082	male	SESO2_SESO3	SlideOut_Fr_LH	562479	female
Se11.B	Cond.Cmpt.	560082	male	SESO5_SESO6	SlideOut_Rr_LH	562479	female
Se11.C	Cond.Cmpt.	560082	male	SESO7_SESO8	SlideOut_Rr_RH	562479	female
Se13	Engine_Cmpt	562350	male	So7	ServiceCmpt.	561566	male
Se14.A	Dash	561782	male	So8	Service_Cmpt	641385	male
Se14.B	Dash	561781	female	So9	Engine_Cmpt	564127	female
Se16A.A	Entrance_Door	562651	female	So11	Cond.Cmpt.	561566	female
Se16A.B	Entrance_Door	562651	female	So13	Evap_Cmpt	641385	male
Se17.A	RightHandConsole	562019	female	So21	Front_Axle_Cmpt	564046	female
Se17.B	RightHandConsole	562019	female	So22	Front_Axle_Cmpt	564046	female
Se18	Pneumatic_Panel	561566	female	So23	Rear_Axle_Cmpt	564046	female
Se19	Service_Cmpt	563677	male	So24	Rear_Axle_Cmpt	564046	female
Se20	Evap_Cmpt	562426	male	So28	Pneumatic_Panel	641385	male
Se21	Dash	561248	female	So29	Pneumatic_Panel	641385	male
Se23	EngineCmpt.	563159	male	So30	Pneumatic_Panel	641385	male

CONNECTORS LIST

No	Location	Part #	Gender	No	Location	Part #	Gender
So31	Pneumatic_Panel	641385	male	Sw45A.A	5nd_LH_Lugg_Door	562485	male
So32	Pneumatic_Panel	641385	male	Sw45A.B	5nd_LH_Lugg_Door	562486	female
So36	Engine_Cmpt	561690	male	Sw46A.A	5nd_RH_Lugg_Door	562485	male
So38	1stLuggCmpt.	561566	female	Sw46A.B	5nd_RH_Lugg_Door	562486	female
SoSo1	SlideOut_Panel	641385	male	Sw47A.A	3d_LH_Lugg_Door	562485	male
SoSo2	SlideOut_Panel	641385	male	Sw47A.B	3d_LH_Lugg_Door	562486	female
SoSo3	SlideOut_Panel	641385	male	Sw48A.A	3rd_RH_Lugg_Door	562485	male
SOSO4	SlideOut_Panel	641385	male	Sw48A.B	3rd_RH_Lugg_Door	562486	female
SoSo5	SlideOut_Panel	641385	male	Sw49A.A	2nd_LH_Lugg_Door	562485	male
SoSo6	SlideOut_Panel	641385	male	Sw49A.B	2nd_LH_Lugg_Door	562486	female
SoSo7	SlideOut_Panel	564045	female	Sw50A.A	2nd_RH_Lugg_Door	562485	male
SoSo8	SlideOut_Panel	564045	female	Sw50A.B	2nd_RH_Lugg_Door	562486	female
spBar4	Engine_Cmpt	564135	male	Sw51A.A	1st_LH_Lugg_Door	562485	male
spBar5	Engine_Cmpt	564135	male	Sw51A.B	1st_LH_Lugg_Door	562486	female
spBar6	Engine_Cmpt	564135	male	Sw52A.A	1st_RH_Lugg_Door	562485	male
spBar7	Cond_Cmpt	564135	male	Sw52A.B	1st_RH_Lugg_Door	562486	female
spBar19	Cond_Cmpt	564135	male	Sw58	EngineCmpt.	562581	male
spBar20	Cond_Cmpt	564135	male	Sw59	EngineCmpt.	562485	male
spBar21	Cond_Cmpt	564135	male	Sw63A	LH_Console	562763	male
Sw1.C258	Dash	561188	female	Sw64.A	Service_Cmpt	560815	female
Sw1.C259	Dash	561186	male	Sw64.B	Service_Cmpt	560815	female
Sw2	Dash	562763	male	Sw82.A	RJB	561457	female
Sw3	Dash	562763	male	Sw82.B	RJB	561457	female
Sw4	Dash	562763	male	Sw82.C	RJB	561457	female
Sw5	Dash	562763	male	Sw82.D	RJB	561457	female
Sw6	Dash	562763	male	Sw83.A	Dash	560082	female
Sw7A	Cond_Cmpt	562877	female	Sw83.B	Dash	560815	female
Sw7B.A	Cond_Cmpt	562485	male	Sw83.C	Dash	560082	female
Sw7B.B	Cond_Cmpt	562486	female	Sw83.D	Dash	560815	female
Sw11A	LH_Console	562763	male	Sw85	LeftHandConsole	562749	male
Sw14	Dash	562763	male	Sw99	Dash	562763	male
Sw16	Dash	562763	male	Sw100	Dash	562763	male
Sw17	Dash	562763	male	Sw102	Dash	562763	male
Sw18A	Dash	562763	male	Sw103A	LH_Console	562763	male
Sw24	Dash	562763	male	Sw104	Dash	562763	male
Sw35	LH_Console	562763	male	Sw107.A	LH_Console	561457	female
Sw38	LeftHandConsole	562763	male	Sw107.B	LH_Console	561457	female
Sw39.A	RJB	562403	female	Sw107.C	LH_Console	561457	female
Sw39.B	RJB	562403	female	Sw107.D	LH_Console	561457	female
Sw40	LeftHandConsole	561690	male	Sw107.E	LH_Console	561457	female
Sw41	LeftHandConsole	562749	male	Sw107.F	LH_Console	561457	female
Sw44.A	FJB	562403	female	Sw107.G	LH_Console	561457	female
Sw44.B	FJB	562403	female	Sw107.H	LH_Console	561457	female

CONNECTORS LIST

No	Location	Part #	Gender				
Sw107.J	LH_Console	561457	female				
Sw107.K	LH_Console	561457	female				
Sw108	LeftHandConsole	562763	male				
Sw116.A	4thLuggCmpt	560079	female				
Sw116.B	4thLuggCmpt	560079	female				
Sw117.A	5thLuggCmpt.	560079	female				
Sw117.B	5thLuggCmpt.	560079	female				
Sw119	Dash	562763	male				
Sw120	DriverArea	562237	female				
Sw122	PassengerArea	562763	male				
Sw128A.A	Evap_Cmpt	562485	male				
Sw128A.B	Evap_Cmpt	562486	female				
Sw137	Dash	562763	male				
Sw160	Dash	562763	male				
Sw161	Dash	562763	male				
SwSo1.A	SlideOut_Fr_LH	561552	female				
SwSo2	SlideOut_Rr_LH	561552	female				
SwSo3	SlideOut_Rr_RH	561552	female				
VECF1	FJB	563186	male				
VECF2	FJB	563183	male				
VECF3	FJB	563185	male				
VECF4	FJB	563182	male				
VECF9	FJB	563448	male				
VECF10	FJB	563181	male				
VECF11	FJB	563184	male				
VECF12	FJB	563187	male				
Vecr1	RJB	563186	male				
Vecr2	RJB	563183	male				
Vecr3	RJB	563185	male				
VECR4	RJB	563182	male				
Vecr9	RJB	563448	male				
Vecr10	RJB	563181	male				
VECR11	RJB	563184	male				
VECR12	RJB	563187	male				
Y80	Engiene_Cmpt	563789	male				
Y81	Cond_Cmpt	563793	male				

CONNECTORS LIST

No	Location	Part #	Gender	No	Location	Part #	Gender
A2	LH_CONSOLE	563984	male	A45.J1	FJB	563133	male
A4A.A	Service_Cmpt	562428	female	A45.J2	FJB	563132	male
A4A.B	Service_Cmpt	561188	female	A45.J3	FJB	562957	male
A5A	Service_Cmpt	562428	female	A46.J1	FJB	563133	male
A6	Rear_Axle_Cmpt	562427	male	A46.J2	FJB	563132	male
A7	Rear_Axle_Cmpt	563979	male	A46.J3	FJB	562957	male
A9.Cx1	FJB	564041	female	A47.J1	RightHandConsole	563133	male
A9.Cx2	FJB	563678	male	A47.J2	RightHandConsole	563132	male
A9.Cx3	FJB	564037	female	A47.J3	RightHandConsole	562957	male
A9.Cx4	FJB	564038	female	A48.J1	RightHandConsole	563133	male
A14A.A	Dash	562766	male	A48.J2	RightHandConsole	563132	male
A14A.B	Dash	562767	male	A48.J3	RightHandConsole	562957	male
A14A.C	Dash	562765	male	A49.J1	RJB	562767	male
A15	Dash	562464	male	A49.J2	RJB	563132	male
A18.J2	FJB	562650	male	A49.J3	RJB	562957	male
A24.A	RightHandConsole	561890	male	A50.J1	RJB	563133	male
A24.B	RightHandConsole	561566	female	A50.J2	RJB	563132	male
A27	ServiceCmpt.	562929	male	A50.J3	RJB	562957	male
A28	ServiceCmpt.	562928	male	A51.J1	RJB	563133	male
A29	Dash	562464	male	A51.J2	RJB	563132	male
A30.A	RightHandConsole	561611	male	A51.J3	RJB	562957	male
A31.J1	DASH	562780	male	A52.J1	RJB	563133	male
A31.J2	DASH	562842	male	A52.J2	RJB	563132	male
A31.J3	DASH	562464	male	A52.J3	RJB	562957	male
A31.J4	DASH	562465	male	A54.J1	Evap.Cmpt.	563133	male
A31.J5	DASH	563071	male	A54.J2	Evap.Cmpt.	563132	male
A32.A	1stLuggCmpt.	561611	male	A54.J3	Evap.Cmpt.	562957	male
A32.C	1stLuggCmpt.	561566	female	A55.J1	Dash	562767	male
A36.JA	FJB	562767	male	A55.J2	Dash	563132	male
A36.JB	FJB	562765	male	A55.J3	Dash	562957	male
A36.JC	FJB	562957	male	A56.J1	Slide-OutPanel	563133	male
A41.J1	FJB	562767	male	A56.J2	Slide-OutPanel	563132	male
A41.J2	FJB	563132	male	A56.J3	Slide-OutPanel	562957	male
A41.J3	FJB	562957	male	A57.J1	Slide-OutPanel	563133	male
A42.J1	FJB	562767	male	A57.J2	Slide-OutPanel	563132	male
A42.J2	FJB	563132	male	A57.J3	Slide-OutPanel	562957	male
A42.J3	FJB	562957	male	A58.J1	Slide-OutPanel	563133	male
A43.J1	FJB	562767	male	A58.J2	Slide-OutPanel	563132	male
A43.J2	FJB	563132	male	A58.J3	Slide-OutPanel	562957	male
A43.J3	FJB	562957	male	A77	RJB	564547	male
A44.J1	FJB	563133	male	A78	RJB	562583	female
A44.J2	FJB	563132	male	A79	RJB	562581	male
A44.J3	FJB	562957	male	A80	RJB	562477	male

CONNECTORS LIST

No	Location	Part #	Gender	No	Location	Part #	Gender
A81A.JA	FJB	562767	male	C3	RJB	563590	female
A81A.JB	FJB	562765	male	C3S	RJB	563593	male
A81A.JC	FJB	562957	male	C3S	RJB	563590	female
A83	FJB	565970	female	C4	ServiceCmpt.	563580	male
A96	FJB	564073	female	C4	ServiceCmpt.	563581	female
A97	Dash	563226	male	C5	FJB	563589	male
A100	Front_Axle_Cmpt	563758	female	C5	FJB	563590	female
A101	Rear_Axle_Cmpt	563758	female	C5S	FJB	563589	male
A102	Rear_Axle_Cmpt	563758	female	C5S	FJB	563590	female
A103	Dash	562070	female	C6	ServiceCmpt.	563582	male
A106	Entrance_Door	565974	male	C6	ServiceCmpt.	563583	female
A115	DASH	562865	male	C7	Service_Cmpt	562581	female
A131.A	Engine_Cmpt	561782	male	C7	Service_Cmpt	562583	female
A131.B	Engine_Cmpt	561781	female	C8	Service_Cmpt	563227	male
A137A	Cond_Cmpt	20429843	male	C8	Service_Cmpt	563614	female
A138	Cond_Cmpt	563787	male	C9	Evap_Cmpt	561986	male
A139	Dash	564501	male	C9	Evap_Cmpt	561987	female
Alt1D.A	Engine_Cmpt	563746	female	C10	Engine_Cmpt	562581	male
Alt1D.B	Engine_Cmpt	560815	female	C10	Engine_Cmpt	562583	female
Alt1D.C	Engine_Cmpt	564469	female	C11	ServiceCmpt.	563580	male
Alt2D.A	Engine_Cmpt	563746	female	C11	ServiceCmpt.	563581	female
Alt2D.B	Engine_Cmpt	560815	female	C12	RJB	561986	male
Alt2D.C	Engine_Cmpt	564469	female	C12	RJB	561987	female
Alt3.A	Engine_Cmpt	563746	female	C13_plug	Right_Hand_Console	563589	male
Alt3.B	Engine_Cmpt	560815	female	C13_socket	Right_Hand_Console	563590	female
Alt3.C	Engine_Cmpt	564469	female	C13S	RightHandConsole	563593	male
B85	Engine_Cmpt	563815	male	C13S	RightHandConsole	563590	female
B96.J1	Engine_Cmpt	563821	male	C15	5thLuggCmpt.	561646	male
B96B	Engine_Cmpt	563823	male	C15	5thLuggCmpt.	561645	female
B97	Engine_Cmpt	563816	male	C15B	5thLuggCmpt.	568110	male
B98.J1	Engine_Cmpt	563817	male	C15B	5thLuggCmpt.	568109	female
B115	Engine_Cmpt	563818	female	C17	RJB	561986	male
B142C	Engine_Cmpt	563793	male	C17	RJB	561987	female
B310	Engine_Cmpt	565967	male	C18	FJB	561986	male
C1	FJB	563589	male	C18	FJB	561987	female
C1	FJB	563590	female	C19	RJB	561986	male
C1S	FJB	563589	male	C19	RJB	561987	female
C1S	FJB	563590	female	C20A	Engine_Cmpt	562485	male
C2	ServiceCmpt.	563580	male	C20A	Engine_Cmpt	562486	female
C2	ServiceCmpt.	563581	female	C20B	Engine_Cmpt	562485	male
C2A	FJB	563580	male	C20B	Engine_Cmpt	562486	female
C2A	FJB	563581	female	C21A	RJB	561646	male
C3	RJB	563589	male				

CONNECTORS LIST

No	Location	Part #	Gender	No	Location	Part #	Gender
C21A	RJB	561645	female	C64A	Engine.Cmpt.	568110	male
C21B	RJB	561646	male	C64A	Engine.Cmpt.	568109	female
C21B	RJB	561645	female	C71	FJB	561646	male
C22	RJB	561847	male	C71	FJB	561645	female
C22	RJB	561862	female	C72	ServiceCmpt.	561646	male
C23	Evap.Cmpt.	561847	male	C72	ServiceCmpt.	561645	female
C23	Evap.Cmpt.	561862	female	C74	ServiceCmpt.	561645	female
C24_plug	Evap.Cmpt.	561690	male	C74	ServiceCmpt.	561646	male
C24_socket	Evap.Cmpt.	561566	female	C75	Cond_Door	561515	male
C26	Evap.Cmpt.	563226	male	C75	Cond_Door	561552	female
C26	Evap.Cmpt.	563613	female	C77	Evap_Door	561515	male
C26AA	Evap.Cmpt.	568110	male	C77	Evap_Door	561552	female
C26AA	Evap.Cmpt.	568109	female	C81	1st_LH_Lugg_Door	561515	male
C26B	Evap.Cmpt.	563227	male	C81	1st_LH_Lugg_Door	561552	female
C26B	Evap.Cmpt.	563614	female	C82	1st_RH_Lugg_Door	561515	male
C27	RJB	562005	male	C82	1st_RH_Lugg_Door	561552	female
C27	RJB	561714	female	C83	2nd_LH_Lugg_Door	561515	male
C28	5thLuggCmpt.	561637	male	C83	2nd_LH_Lugg_Door	561552	female
C28	5thLuggCmpt.	561636	female	C84	2nd_RH_Lugg_Door	561515	male
C34	RightHandConsole	561986	male	C84	2nd_RH_Lugg_Door	561552	female
C34	RightHandConsole	561987	female	C85	3rd_LH_Lugg_Door	561515	male
C35	Evap.Cmpt.	561607	male	C85	3rd_LH_Lugg_Door	561552	female
C35	Evap.Cmpt.	561606	female	C86	3rd_RH_Lugg_Door	561515	male
C36	FJB	561986	male	C86	3rd_RH_Lugg_Door	561552	female
C36	FJB	561987	female	C87	RearRoof	563618	male
C39A	Engine.Cmpt.	561782	male	C87	RearRoof	563616	female
C39A	Engine.Cmpt.	561781	female	C89	RearRoof	561581	male
C40	Dash	562485	male	C89	RearRoof	561582	female
C40	Dash	562486	female	C91	RJB	562285	male
C44_plug	FJB	561577	male	C91	RJB	562282	female
C44_socket	FJB	561605	female	C94_plug	FJB	563589	male
C45	FJB	561643	male	C94_socket	FJB	563590	female
C45	FJB	561642	female	C96	FJB	561643	male
C49A	FJB	562005	male	C96	FJB	561642	female
C49A	FJB	561714	female	C97	FJB	561643	male
C50	RJB	561782	male	C97	FJB	561642	female
C50	RJB	561781	female	C98	Engine_Cmpt	563817	male
C54	Engine.Cmpt.	563226	male	C98	Engine_Cmpt	563830	female
C54	Engine.Cmpt.	563613	female	C99_plug	RJB	563589	male
C54A	Engine.Cmpt.	561643	male	C99_socket	RJB	563590	female
C54A	Engine.Cmpt.	561642	female	C100	5thLuggCmpt.	563589	male
C54B	Engine.Cmpt.	562477	male	C100	5thLuggCmpt.	563590	female
C54B	Engine.Cmpt.	562479	female	C100A	Evap_Cmpt	563589	male

CONNECTORS LIST

No	Location	Part #	Gender	No	Location	Part #	Gender
C100A	Evap_Cmpt	563590	female	C228	EngineCmpt.	563227	male
C100S	5thLuggCmpt.	563589	male	C228	EngineCmpt.	563614	female
C100S	5thLuggCmpt.	563590	female	C228A	EngineCmpt.	563227	male
C101	ServiceCmpt.	561690	male	C228A	EngineCmpt.	563614	female
C101	ServiceCmpt.	561566	female	C246	ServiceCmpt.	563090	male
C102	RJB	561690	male	C246	ServiceCmpt.	563091	female
C102	RJB	561566	female	C266	Entrance_Door	561640	male
C102A	RJB	561637	male	C266	Entrance_Door	561639	female
C102A	RJB	561636	female	C269	RHConsole	563090	male
C105	FJB	562581	male	C269	RHConsole	563091	female
C105	FJB	562583	female	C279	FJB	562477	male
C106_plug	FJB	562581	male	C279	FJB	562479	female
C106_socket	FJB	562583	female	C290	5nd_RH_Lugg_Door	561515	male
C110A	Pneumatic_Panel	568110	male	C290	5nd_RH_Lugg_Door	561552	female
C110A	Pneumatic_Panel	568109	female	C291	5nd_LH_Lugg_Door	561515	male
C119A	Rear_Engine_Door	562581	male	C291	5nd_LH_Lugg_Door	561552	female
C119A	Rear_Engine_Door	562583	female	C330	FJB	561690	male
C120A	Rear_Engine_Door	563580	male	C330	FJB	561566	female
C120A	Rear_Engine_Door	563581	female	C342	EngineCmpt.	562485	male
C152	CondensorCmpt.	561611	male	C342	EngineCmpt.	562486	female
C152	CondensorCmpt.	561610	female	C360	Dash	561247	male
C171	FJB	561646	male	C360	Dash	561248	female
C171	FJB	561645	female	C380A	Dash	564222	male
C172	ServiceCmpt.	561637	male	C380A	Dash	564224	female
C172	ServiceCmpt.	561635	female	C397	RJB	562285	male
C193	RJB	563589	male	C397	RJB	562282	female
C193	RJB	563590	female	C400_plug	EngineCmpt.	561782	male
C194	FJB	563589	male	C400_socket	EngineCmpt.	561781	female
C194	FJB	563590	female	C426	Engine_Cmpt	561611	male
C200	FJB	561607	male	C426	Engine_Cmpt	561610	female
C200	FJB	561606	female	C463	EngineCmpt.	562570	female
C200B	Engine_Cmpt	562471	male	C463	EngineCmpt.	562571	male
C200B	Engine_Cmpt	562348	female	C464A	RJB	564222	male
C222	FJB	562477	male	C464A	RJB	564224	female
C222	FJB	562479	female	C550	5thLuggCmpt.	561476	male
C223	FJB	563227	male	C550	5thLuggCmpt.	561477	female
C223	FJB	563614	female	C551	5thLuggCmpt.	561476	male
C224	Dash	561637	male	C551	5thLuggCmpt.	561477	female
C224	Dash	561636	female	C552	3rdLuggCmpt.	561476	male
C225	FJB	562650	male	C552	3rdLuggCmpt.	561477	female
C225	FJB	562649	female	C553	2ndLuggCmpt.	561476	male
C226	FJB	562650	male	C553	2ndLuggCmpt.	561477	female
C226	FJB	562649	female	C554	1stLuggCmpt.	561476	male

CONNECTORS LIST

No	Location	Part #	Gender	No	Location	Part #	Gender
C554	1stLuggCmpt.	561477	female	EIA	Engine_CMPT	563739	male
C555	1stLuggCmpt.	561476	male	L1	Pneumatic_Panel	562848	male
C555	1stLuggCmpt.	561477	female	L16	Front_Roof	562803	male
C556	5thLuggCmpt.	561476	male	L17	Front_Roof	562803	male
C556	5thLuggCmpt.	561477	female	L18	Entrance_Door	562549	male
C557	3rdLuggCmpt.	561476	male	L19	Entrance_Door	562549	male
C557	3rdLuggCmpt.	561477	female	L21.A	FrontRoof	561608	female
C558	4thLuggCmpt	561476	male	L21.B	FrontRoof	562286	male
C558	4thLuggCmpt	561477	female	L22.A	FrontRoof	561608	female
C559	5thLuggCmpt.	561476	male	L22.B	FrontRoof	562286	male
C559	5thLuggCmpt.	561477	female	L23.A	FrontRoof	561608	female
C617	Mirror_LH	563801	male	L23.B	FrontRoof	562286	male
C617	Mirror_LH	563800	female	L24.A	FrontRoof	561608	female
C618	Mirror_RH	563801	male	L24.B	FrontRoof	562286	male
C618	Mirror_RH	563800	female	L25.A	FrontRoof	561608	female
C717	RJB	561646	male	L25.B	FrontRoof	562286	male
C717	RJB	561645	female	L26.A	FrontRoof	561608	female
C_ALT1	Engine_Cmpt	562477	male	L26.B	FrontRoof	562286	male
C_ALT1	Engine_Cmpt	562479	female	L27.A	FrontRoof	561608	female
C_ALT2	Engine_Cmpt	562477	male	L27.B	FrontRoof	562286	male
C_ALT2	Engine_Cmpt	562479	female	L63	Outside_Front_RH	562155	male
CC1	ServiceCmpt.	563227	male	L64	Outside_Front_RH	562155	male
CC1	ServiceCmpt.	563614	female	L65	Outside_Front_LH	562155	male
CC2	ServiceCmpt.	563226	male	L66	Outside_Front_LH	562155	male
CC2	ServiceCmpt.	563613	female	L67.A	Outside_3rd_Lugg_Door_RH	562155	male
CFHAC	Evap_Cmpt	564238	male	L68.A	Outside_3rd_Lugg_Door_RH	562155	male
CFHF1	FJB	564560	male	L69.A	Outside_3rd_Lugg_Door_LH	562155	male
CS01	Slide-OutPanel	563226	male	L70.A	Outside_3rd_Lugg_Door_LH	562155	male
CS01	Slide-OutPanel	563613	female	L72	Rear_Vehicle	562155	male
CS01S	Slide-OutPanel	563226	male	L74	Rear_Vehicle	562155	male
CS01S	Slide-OutPanel	563613	female	L75	Rear_Vehicle	562155	male
CS02	Slide-OutPanel	561643	male	L76	Rear_Engine_Door	562155	male
CS02	Slide-OutPanel	561641	female	L87A.A	Rear_Roof	561608	female
CS05	Slide-OutPanel	561847	male	L87A.B	Rear_Roof	562286	male
CS05	Slide-OutPanel	561924	female	L88A.A	Rear_Roof	561608	female
CS07	Slide-OutPanel	562581	male	L88A.B	Rear_Roof	562286	male
CS07	Slide-OutPanel	562583	female	L89A.A	Rear_Roof	561608	female
CSo8	Slide-OutPanel	562581	male	L89A.B	Rear_Roof	562286	male
CSo8	Slide-OutPanel	562583	female	L90A.A	Rear_Roof	561608	female
CSo9	Slide-OutPanel	562581	male	L90A.B	Rear_Roof	562286	male
CSo9	Slide-OutPanel	562583	female	L93.A	Rear_Vehicle	563069	female
CT2	EngineCmpt.	563226	male	L93.B	Rear_Vehicle	563069	female
CT2	EngineCmpt.	563613	female	L94.A	EngineCmpt.	563069	female

CONNECTORS LIST

No	Location	Part #	Gender	No	Location	Part #	Gender
L94.B	EngineCmpt.	563069	female	L291	Engine_Door	562565	female
L95A	Outside_Front_LH	562485	male	L302	Outside_Front_RH	562789	male
L95B	Outside_Front_LH	562485	male	L303	Outside_Front_LH	562789	male
L96A	Outside_Front_RH	562485	male	L350	Rr_Axle_Cmpt	562350	male
L96B	Outside_Front_RH	562485	male	L350A.A	Rr_Axle_Cmpt	563340	male
L97.A	Outside_Front_LH	563069	female	L350A.B	Rr_Axle_Cmpt	563340	male
L97.B	Outside_Front_LH	563069	female	L350A.C	Rr_Axle_Cmpt	562350	male
L98.A	Entrance_Door	563069	female	Mo3	Dash	561667	female
L98.B	Outside_Front_RH	563069	female	Mo4	Dash	562076	male
L173	Engine_Cmpt	563590	female	Mo7	Cond_Cmpt	563691	male
L174	Engine_Cmpt	563590	female	Mo8	Cond_Cmpt	563691	male
L175	RJB	561247	male	Mo12	Evap.Cmpt.	561690	male
L176	5thLuggCmpt.	561247	male	Mo15	Over_Head_Driver_Area	560900	female
L177	5thLuggCmpt.	561247	male	Mo16	Over_Head_Driver_Area	560900	female
L178	3rdLuggCmpt.	561247	male	Mo17	LeftHandConsole	563626	male
L179	3rdLuggCmpt.	561247	male	Mo18	Fr_Service_Door	562474	male
L180	2ndLuggCmpt.	561247	male	Mo19	Fr_Service_Door	562474	male
L181	2ndLuggCmpt.	561247	male	Mo20	Fr_Service_Door	562474	male
L182	1stLuggCmpt.	561247	male	Mo21	FrontRoof	561186	male
L183	1stLuggCmpt.	561247	male	Mo22	RightHandConsole	561186	male
L184	ServiceCmpt.	561247	male	Mo24	RightHandConsole	562348	female
L185.A	Service_Cmpt	562651	female	Mo25	RightHandConsole	562348	female
L185.B	Service_Cmpt	562290	female	Mo26A	Entrance_Door	564161	male
L186.A	Service_Cmpt	562651	female	Mo27	Cond_Cmpt	563691	male
L186.B	Service_Cmpt	562290	female	Mo28	Cond_Cmpt	563691	male
L187.A	Engine_Cmpt	561690	male	Mo37	4th_Lugg_Cmpt	564161	male
L189	Outside_Front_RH	562069	male	Mo44	5th_Lugg_Cmpt	561477	female
L190	Outside_Front_LH	562069	male	Mo50	Service_Cmpt	561690	male
L193.A	Dash	560488	female	Mo51	1stLuggCmpt.	561690	male
L193.B	Dash	560488	female	Mo53	RJB	561248	female
L194.A	Dash	562019	female	Mo54	Service_Cmpt	562474	male
L194.B	Dash	560488	female	Mo55.A	Rr_RH_Slideout	561967	male
L195.A	Dash	560488	female	Mo56	5th_Lugg_Cmpt	561477	female
L195.B	Dash	560488	female	Mo58	1st_Lugg_Cmpt	561477	female
L199	Engine.Cmpt.	562848	male	Mo72	Entrance_Door	564161	male
L203	RightHandConsole	561690	male	MoSo1.A	Front_LH_Slideout	561967	male
L205	Evap.Cmpt.	562485	male	MOSO2.A	Rr_LH_Slideout	561967	male
L211	Entrance_Door	562549	male	Pot1.A	Dash	560488	female
L282	Rear_Axle_Cmpt	561690	male	Pot1.B	Dash	560488	female
L285	Dash	561247	male	Pot1.C	Dash	560488	female
L287	4thLuggCmpt	561247	male	R3	RJB	563409	male
L288	4thLuggCmpt	561247	male	R10	Evap.Cmpt.	563409	male
L290	Engine_Door	562565	female	R12	Evap.Cmpt.	563409	male

CONNECTORS LIST

No	Location	Part #	Gender	No	Location	Part #	Gender
R17	RJB	564210	male	Se24	EngineCmpt.	563159	male
R18	FJB	564210	male	Se25	PassengerArea	561248	female
R19	FJB	564210	male	Se29	Engine_Cmpt	561566	female
R21	RJB	561183	male	Se30	Engine_Door	562877	female
R23	RightHandConsole	561183	male	Se31	Compr_Door	562877	female
R24	FJB	561183	male	Se32	EngineCmpt.	563057	male
R25	RJB	561183	male	Se33	EngineCmpt.	562856	male
R29	RJB	563409	male	Se34	EngineCmpt.	563057	male
R30	RJB	564496	male	Se35	EngineCmpt.	563057	male
R31	RJB	564496	male	Se36	Engine_Cmpt	563628	female
R32	RJB	564496	male	Se37	Front_Axle_RH	641132	female
R33	RJB	564496	male	Se38	Front_Axle	641132	female
R34	RJB	564210	male	Se39	Rear_Axle_LH	641132	female
R36	FJB	561183	male	Se40	Rear_Axle_LH	641132	female
R37	FJB	561183	male	Se45	ServiceCmpt.	563409	male
R38	FJB	561183	male	Se46	AboveRearAxle	562348	female
R41	FJB	561183	male	Se49	Engine_Cmpt	563677	male
R42	FJB	561183	male	Se50	Engine_Cmpt	562426	male
R43	FJB	561183	male	Se52.A	RightHandConsole	560488	female
Res3	RJB	563590	female	Se52.B	RightHandConsole	560488	female
Res6	FJB	563593	female	Se53	Service_Cmpt	563159	female
Res7.A	FJB	563590	female	Se54	Service_Cmpt	563159	female
Res15	RJB	561782	male	Se55	Service_Cmpt	563159	female
Res19	Dash	563590	female	Se60	Service_Cmpt	563409	male
Res20	Entrance_Door	563590	female	Se65	Dash	564042	female
Res31	Cond_Cmpt	562350	male	Se67	Service_Cmpt	563159	female
Res32	Cond_Cmpt	563764	female	Se69	Service_Cmpt	563159	female
Res53.A	Dash	563590	female	SESO1	SlideOut_Panel	563159	male
Se11.A	Cond.Cmpt.	560082	male	SESO2_SESO3	SlideOut_Fr_LH	562479	female
Se11.B	Cond.Cmpt.	560082	male	SESO5_SESO6	SlideOut_Rr_LH	562479	female
Se11.C	Cond.Cmpt.	560082	male	SESO7_SESO8	SlideOut_Rr_RH	562479	female
Se13	Engine_Cmpt	562350	male	So7	ServiceCmpt.	561566	male
Se14.A	Dash	561782	male	So8	Service_Cmpt	641385	male
Se14.B	Dash	561781	female	So9	Engine_Cmpt	564127	female
Se16A.A	Entrance_Door	562651	female	So11	Cond.Cmpt.	561566	female
Se16A.B	Entrance_Door	562651	female	So13	Evap_Cmpt	641385	male
Se17.A	RightHandConsole	562019	female	So21	Front_Axle_Cmpt	564046	female
Se17.B	RightHandConsole	562019	female	So22	Front_Axle_Cmpt	564046	female
Se18	Pneumatic_Panel	561566	female	So23	Rear_Axle_Cmpt	564046	female
Se19	Service_Cmpt	563677	male	So24	Rear_Axle_Cmpt	564046	female
Se20	Evap_Cmpt	562426	male	So28	Pneumatic_Panel	641385	male
Se21	Dash	561248	female	So29	Pneumatic_Panel	641385	male
Se23	EngineCmpt.	563159	male	So30	Pneumatic_Panel	641385	male

CONNECTORS LIST

No	Location	Part #	Gender	No	Location	Part #	Gender
So31	Pneumatic_Panel	641385	male	Sw45A.A	5nd_LH_Lugg_Door	562485	male
So32	Pneumatic_Panel	641385	male	Sw45A.B	5nd_LH_Lugg_Door	562486	female
So36	Engine_Cmpt	561690	male	Sw46A.A	5nd_RH_Lugg_Door	562485	male
So38	1stLuggCmpt.	561566	female	Sw46A.B	5nd_RH_Lugg_Door	562486	female
SoSo1	SlideOut_Panel	641385	male	Sw47A.A	3d_LH_Lugg_Door	562485	male
SoSo2	SlideOut_Panel	641385	male	Sw47A.B	3d_LH_Lugg_Door	562486	female
SoSo3	SlideOut_Panel	641385	male	Sw48A.A	3rd_RH_Lugg_Door	562485	male
SOSO4	SlideOut_Panel	641385	male	Sw48A.B	3rd_RH_Lugg_Door	562486	female
SoSo5	SlideOut_Panel	641385	male	Sw49A.A	2nd_LH_Lugg_Door	562485	male
SoSo6	SlideOut_Panel	641385	male	Sw49A.B	2nd_LH_Lugg_Door	562486	female
SoSo7	SlideOut_Panel	564045	female	Sw50A.A	2nd_RH_Lugg_Door	562485	male
SoSo8	SlideOut_Panel	564045	female	Sw50A.B	2nd_RH_Lugg_Door	562486	female
spBar4	Engine_Cmpt	564135	male	Sw51A.A	1st_LH_Lugg_Door	562485	male
spBar5	Engine_Cmpt	564135	male	Sw51A.B	1st_LH_Lugg_Door	562486	female
spBar6	Engine_Cmpt	564135	male	Sw52A.A	1st_RH_Lugg_Door	562485	male
spBar7	Cond_Cmpt	564135	male	Sw52A.B	1st_RH_Lugg_Door	562486	female
spBar19	Cond_Cmpt	564135	male	Sw58	EngineCmpt.	562581	male
spBar20	Cond_Cmpt	564135	male	Sw59	EngineCmpt.	562485	male
spBar21	Cond_Cmpt	564135	male	Sw63A	LH_Console	562763	male
Sw1.C258	Dash	561188	female	Sw64.A	Service_Cmpt	560815	female
Sw1.C259	Dash	561186	male	Sw64.B	Service_Cmpt	560815	female
Sw2	Dash	562763	male	Sw82.A	RJB	561457	female
Sw3	Dash	562763	male	Sw82.B	RJB	561457	female
Sw4	Dash	562763	male	Sw82.C	RJB	561457	female
Sw5	Dash	562763	male	Sw82.D	RJB	561457	female
Sw6	Dash	562763	male	Sw83.A	Dash	560082	female
Sw7A	Cond_Cmpt	562877	female	Sw83.B	Dash	560815	female
Sw7B.A	Cond_Cmpt	562485	male	Sw83.C	Dash	560082	female
Sw7B.B	Cond_Cmpt	562486	female	Sw83.D	Dash	560815	female
Sw11A	LH_Console	562763	male	Sw85	LeftHandConsole	562749	male
Sw14	Dash	562763	male	Sw99	Dash	562763	male
Sw16	Dash	562763	male	Sw100	Dash	562763	male
Sw17	Dash	562763	male	Sw102	Dash	562763	male
Sw18A	Dash	562763	male	Sw103A	LH_Console	562763	male
Sw24	Dash	562763	male	Sw104	Dash	562763	male
Sw35	LH_Console	562763	male	Sw107.A	LH_Console	561457	female
Sw38	LeftHandConsole	562763	male	Sw107.B	LH_Console	561457	female
Sw39.A	RJB	562403	female	Sw107.C	LH_Console	561457	female
Sw39.B	RJB	562403	female	Sw107.D	LH_Console	561457	female
Sw40	LeftHandConsole	561690	male	Sw107.E	LH_Console	561457	female
Sw41	LeftHandConsole	562749	male	Sw107.F	LH_Console	561457	female
Sw44.A	FJB	562403	female	Sw107.G	LH_Console	561457	female
Sw44.B	FJB	562403	female	Sw107.H	LH_Console	561457	female

CONNECTORS LIST

No	Location	Part #	Gender				
Sw107.J	LH_Console	561457	female				
Sw107.K	LH_Console	561457	female				
Sw108	LeftHandConsole	562763	male				
Sw116.A	4thLuggCmpt	560079	female				
Sw116.B	4thLuggCmpt	560079	female				
Sw117.A	5thLuggCmpt.	560079	female				
Sw117.B	5thLuggCmpt.	560079	female				
Sw119	Dash	562763	male				
Sw120	DriverArea	562237	female				
Sw122	PassengerArea	562763	male				
Sw128A.A	Evap_Cmpt	562485	male				
Sw128A.B	Evap_Cmpt	562486	female				
Sw137	Dash	562763	male				
Sw160	Dash	562763	male				
Sw161	Dash	562763	male				
SwSo1.A	SlideOut_Fr_LH	561552	female				
SwSo2	SlideOut_Rr_LH	561552	female				
SwSo3	SlideOut_Rr_RH	561552	female				
VECF1	FJB	563186	male				
VECF2	FJB	563183	male				
VECF3	FJB	563185	male				
VECF4	FJB	563182	male				
VECF9	FJB	563448	male				
VECF10	FJB	563181	male				
VECF11	FJB	563184	male				
VECF12	FJB	563187	male				
Vecr1	RJB	563186	male				
Vecr2	RJB	563183	male				
Vecr3	RJB	563185	male				
VECR4	RJB	563182	male				
Vecr9	RJB	563448	male				
Vecr10	RJB	563181	male				
VECR11	RJB	563184	male				
VECR12	RJB	563187	male				
Y80	Engiene_Cmpt	563789	male				
Y81	Cond_Cmpt	563793	male				

CONNECTORS LIST

No	Location	Part #	Gender	No	Location	Part #	Gender
A2	LH_CONSOLE	563984	male	A44.J2	FJB	563132	male
A4A.A	Service_Cmpt	562428	female	A44.J3	FJB	562957	male
A4A.B	Service_Cmpt	561188	female	A45.J1	FJB	563133	male
A5A	Service_Cmpt	562428	female	A45.J2	FJB	563132	male
A6	Rear_Axle_Cmpt	562427	male	A45.J3	FJB	562957	male
A7	Rear_Axle_Cmpt	563979	male	A46.J1	FJB	563133	male
A9.Cx1	FJB	564041	female	A46.J2	FJB	563132	male
A9.Cx2	FJB	563678	male	A46.J3	FJB	562957	male
A9.Cx3	FJB	564037	female	A47.J1	RightHandConsole	563133	male
A9.Cx4	FJB	564038	female	A47.J2	RightHandConsole	563132	male
A14A.A	Dash	562766	male	A47.J3	RightHandConsole	562957	male
A14A.B	Dash	562767	male	A48.J1	RightHandConsole	563133	male
A14A.C	Dash	562765	male	A48.J2	RightHandConsole	563132	male
A15	Dash	562464	male	A48.J3	RightHandConsole	562957	male
A18.J2	FJB	562650	male	A49.J1	RJB	562767	male
A24.A	RightHandConsole	561890	male	A49.J2	RJB	563132	male
A24.B	RightHandConsole	561566	female	A49.J3	RJB	562957	male
A27	ServiceCmpt.	562929	male	A50.J1	RJB	563133	male
A28	ServiceCmpt.	562928	male	A50.J2	RJB	563132	male
A29	Dash	562464	male	A50.J3	RJB	562957	male
A30.A	RightHandConsole	561611	male	A51.J1	RJB	563133	male
A31.J1	DASH	562780	male	A51.J2	RJB	563132	male
A31.J2	DASH	562842	male	A51.J3	RJB	562957	male
A31.J3	DASH	562464	male	A52.J1	RJB	563133	male
A31.J4	DASH	562465	male	A52.J2	RJB	563132	male
A31.J5	DASH	563071	male	A52.J3	RJB	562957	male
A32.A	1stLuggCmpt.	561611	male	A54.J1	Evap.Cmpt.	563133	male
A32.C	1stLuggCmpt.	561566	female	A54.J2	Evap.Cmpt.	563132	male
A36.JA	FJB	562767	male	A54.J3	Evap.Cmpt.	562957	male
A36.JB	FJB	562765	male	A55.J1	Dash	562767	male
A36.JC	FJB	562957	male	A55.J2	Dash	563132	male
A41.J1	FJB	562767	male	A55.J3	Dash	562957	male
A41.J2	FJB	563132	male	A77	RJB	564547	male
A41.J3	FJB	562957	male	A78	RJB	562583	female
A42.J1	FJB	562767	male	A79	RJB	562581	male
A42.J2	FJB	563132	male	A80	RJB	562477	male
A42.J3	FJB	562957	male	A81A.JA	FJB	562767	male
A43.J1	FJB	562767	male	A81A.JB	FJB	562765	male
A43.J2	FJB	563132	male	A81A.JC	FJB	562957	male
A43.J3	FJB	562957	male	A83	FJB	565970	female
A44.J1	FJB	563133	male	A96	FJB	564073	female

CONNECTORS LIST

No	Location	Part #	Gender	No	Location	Part #	Gender
A97	Dash	563226	male	C4	ServiceCmpt.	563580	male
A100	Front_Axle_Cmpt	563758	female	C4	ServiceCmpt.	563581	female
A101	Rear_Axle_Cmpt	563758	female	C5	FJB	563589	male
A102	Rear_Axle_Cmpt	563758	female	C5	FJB	563590	female
A103	Dash	562070	female	C5S	FJB	563589	male
A106	Entrance_Door	565974	male	C5S	FJB	563590	female
A115	DASH	562865	male	C6	ServiceCmpt.	563582	male
A131.A	Engine_Cmpt	561782	male	C6	ServiceCmpt.	563583	female
A131.B	Engine_Cmpt	561781	female	C7	Service_Cmpt	562581	female
A137A	Cond_Cmpt	20429843	male	C7	Service_Cmpt	562583	female
A138	Cond_Cmpt	563787	male	C8	Service_Cmpt	563227	male
A139	Dash	564501	male	C8	Service_Cmpt	563614	female
Alt1D.A	Engine_Cmpt	563746	female	C9	Evap_Cmpt	561986	male
Alt1D.B	Engine_Cmpt	560815	female	C9	Evap_Cmpt	561987	female
Alt1D.C	Engine_Cmpt	564469	female	C10	Engine_Cmpt	562581	male
Alt2D.A	Engine_Cmpt	563746	female	C10	Engine_Cmpt	562583	female
Alt2D.B	Engine_Cmpt	560815	female	C11	ServiceCmpt.	563580	male
Alt2D.C	Engine_Cmpt	564469	female	C11	ServiceCmpt.	563581	female
Alt3.A	Engine_Cmpt	563746	female	C12	RJB	561986	male
Alt3.B	Engine_Cmpt	560815	female	C12	RJB	561987	female
Alt3.C	Engine_Cmpt	564469	female	C13_plug	Right_Hand_Console	563589	male
B85	Engine_Cmpt	563815	male	C13_socket	Right_Hand_Console	563590	female
B96.J1	Engine_Cmpt	563821	male	C13S	RightHandConsole	563593	male
B96B	Engine_Cmpt	563823	male	C13S	RightHandConsole	563590	female
B97	Engine_Cmpt	563816	male	C15	5thLuggCmpt.	561646	male
B98.J1	Engine_Cmpt	563817	male	C15	5thLuggCmpt.	561645	female
B115	Engine_Cmpt	563818	female	C15B	5thLuggCmpt.	568110	male
B142C	Engine_Cmpt	563793	male	C15B	5thLuggCmpt.	568109	female
B310	Engine_Cpt	565967	male	C17	RJB	561986	male
C1	FJB	563589	male	C17	RJB	561987	female
C1	FJB	563590	female	C18	FJB	561986	male
C1S	FJB	563589	male	C18	FJB	561987	female
C1S	FJB	563590	female	C19	RJB	561986	male
C2	ServiceCmpt.	563580	male	C19	RJB	561987	female
C2	ServiceCmpt.	563581	female	C20A	Engine_Cmpt	562485	male
C2A	FJB	563580	male	C20A	Engine_Cmpt	562486	female
C2A	FJB	563581	female	C20B	Engine_Cmpt	562485	male
C3	RJB	563589	male	C20B	Engine_Cmpt	562486	female
C3	RJB	563590	female	C21A	RJB	561646	male
C3S	RJB	563593	male	C21A	RJB	561645	female
C3S	RJB	563590	female	C21B	RJB	561646	male

CONNECTORS LIST

No	Location	Part #	Gender	No	Location	Part #	Gender
C21B	RJB	561645	female	C54B	Engine.Cmpt.	562477	male
C22	RJB	561847	male	C54B	Engine.Cmpt.	562479	female
C22	RJB	561862	female	C64A	Engine.Cmpt.	568110	male
C23	Evap.Cmpt.	561847	male	C64A	Engine.Cmpt.	568109	female
C23	Evap.Cmpt.	561862	female	C71	FJB	561646	male
C24_plug	Evap.Cmpt.	561690	male	C71	FJB	561645	female
C24_socket	Evap.Cmpt.	561566	female	C72	ServiceCmpt.	561646	male
C26	Evap.Cmpt.	563226	male	C72	ServiceCmpt.	561645	female
C26	Evap.Cmpt.	563613	female	C74	ServiceCmpt.	561645	female
C26A	Evap.Cmpt.	563358	male	C74	ServiceCmpt.	561646	male
C26A	Evap.Cmpt.	563359	female	C75	Cond_Door	561515	male
C26AA	Evap.Cmpt.	568110	male	C75	Cond_Door	561552	female
C26AA	Evap.Cmpt.	568109	female	C77	Evap_Door	561515	male
C26B	Evap.Cmpt.	563227	male	C77	Evap_Door	561552	female
C26B	Evap.Cmpt.	563614	female	C81	1st_LH_Lugg_Door	561515	male
C27	RJB	562005	male	C81	1st_LH_Lugg_Door	561552	female
C27	RJB	561714	female	C82	1st_RH_Lugg_Door	561515	male
C28	5thLuggCmpt.	561637	male	C82	1st_RH_Lugg_Door	561552	female
C28	5thLuggCmpt.	561636	female	C83	2nd_LH_Lugg_Door	561515	male
C34	RightHandConsole	561986	male	C83	2nd_LH_Lugg_Door	561552	female
C34	RightHandConsole	561987	female	C84	2nd_RH_Lugg_Door	561515	male
C35	Evap.Cmpt.	561607	male	C84	2nd_RH_Lugg_Door	561552	female
C35	Evap.Cmpt.	561606	female	C85	3rd_LH_Lugg_Door	561515	male
C36	FJB	561986	male	C85	3rd_LH_Lugg_Door	561552	female
C36	FJB	561987	female	C86	3rd_RH_Lugg_Door	561515	male
C39A	Engine.Cmpt.	561782	male	C86	3rd_RH_Lugg_Door	561552	female
C39A	Engine.Cmpt.	561781	female	C87	RearRoof	563618	male
C40	Dash	562485	male	C87	RearRoof	563616	female
C40	Dash	562486	female	C89	RearRoof	561581	male
C44_plug	FJB	561577	male	C89	RearRoof	561582	female
C44_socket	FJB	561605	female	C91	RJB	562285	male
C45	FJB	561643	male	C91	RJB	562282	female
C45	FJB	561642	female	C92L	Driver_Area	561690	male
C49A	FJB	562005	male	C92L	Driver_Area	561566	female
C49A	FJB	561714	female	C92R	Driver_Area	561690	male
C50	RJB	561782	male	C92R	Driver_Area	561566	female
C50	RJB	561781	female	C94_plug	FJB	563589	male
C54	Engine.Cmpt.	563226	male	C94_socket	FJB	563590	female
C54	Engine.Cmpt.	563613	female	C96	FJB	561643	male
C54A	Engine.Cmpt.	561643	male	C96	FJB	561642	female
C54A	Engine.Cmpt.	561642	female	C97	FJB	561643	male

CONNECTORS LIST

No	Location	Part #	Gender	No	Location	Part #	Gender
C97	FJB	561642	female	C222	FJB	562477	male
C98	Engine.Cmpt.	563817	male	C222	FJB	562479	female
C98	Engine.Cmpt.	563830	female	C223	FJB	563227	male
C99_plug	RJB	563589	male	C223	FJB	563614	female
C99_socket	RJB	563590	female	C224	Dash	561637	male
C100	5thLuggCmpt.	563589	male	C224	Dash	561636	female
C100	5thLuggCmpt.	563590	female	C225	FJB	562650	male
C100A	Evap_Cmpt	563589	male	C225	FJB	562649	female
C100A	Evap_Cmpt	563590	female	C226	FJB	562650	male
C100S	5thLuggCmpt.	563589	male	C226	FJB	562649	female
C100S	5thLuggCmpt.	563590	female	C228	EngineCmpt.	563227	male
C101	ServiceCmpt.	561690	male	C228	EngineCmpt.	563614	female
C101	ServiceCmpt.	561566	female	C228A	EngineCmpt.	563227	male
C102	RJB	561690	male	C228A	EngineCmpt.	563614	female
C102	RJB	561566	female	C228B	EngineCmpt.	562581	male
C102A	RJB	561637	male	C228B	EngineCmpt.	562583	female
C102A	RJB	561636	female	C246	Service_Cmpt	563090	male
C105	FJB	562581	male	C246	Service_Cmpt	563091	female
C105	FJB	562583	female	C266	Entrance_Door	561640	male
C106_plug	FJB	562581	male	C266	Entrance_Door	561639	female
C106_socket	FJB	562583	female	C269	RH_Console	563090	male
C110A	Pneumatic_Panel	568110	male	C269	RH_Console	563091	female
C110A	Pneumatic_Panel	568109	female	C279	FJB	562477	male
C119A	Rear_Engine_Door	562581	male	C279	FJB	562479	female
C119A	Rear_Engine_Door	562583	female	C290	5nd_RH_Lugg_Door	561515	male
C120A	Rear_Engine_Door	563580	male	C290	5nd_RH_Lugg_Door	561552	female
C120A	Rear_Engine_Door	563581	female	C291	5nd_LH_Lugg_Door	561515	male
C152	CondensorCmpt.	561611	male	C291	5nd_LH_Lugg_Door	561552	female
C152	CondensorCmpt.	561610	female	C330	FJB	561690	male
C171	FJB	561646	male	C330	FJB	561566	female
C171	FJB	561645	female	C342	EngineCmpt.	562485	male
C172	ServiceCmpt.	561637	male	C342	EngineCmpt.	562486	female
C172	ServiceCmpt.	561635	female	C360	Dash	561247	male
C193	RJB	563589	male	C360	Dash	561248	female
C193	RJB	563590	female	C380A	Dash	564222	male
C194	FJB	563589	male	C380A	Dash	564224	female
C194	FJB	563590	female	C397	RJB	562285	male
C200	FJB	561607	male	C397	RJB	562282	female
C200	FJB	561606	female	C400_plug	EngineCmpt.	561782	male
C200B	Engine_Cmpt	562471	male	C400_socket	EngineCmpt.	561781	female
C200B	Engine_Cmpt	562348	female	C426	Engine_Cmpt	561611	male

CONNECTORS LIST

No	Location	Part #	Gender	No	Location	Part #	Gender
C426	Engine_Cmpt	561610	female	CFF4_2	Slide-OutPanel	561986	male
C463	Engine_Cmpt	568111	male	CFF4_2	Slide-OutPanel	561987	female
C463	Engine_Cmpt	568112	female	CFHAC	Evap_Cmpt	564238	male
C464A	RJB	564222	male	CFHF1	FJB	564560	male
C464A	RJB	564224	female	CS01	Slide-OutPanel	563226	male
C550	5thLuggCmpt.	561476	male	CS01	Slide-OutPanel	563613	female
C550	5thLuggCmpt.	561477	female	CS01S	Slide-OutPanel	563226	male
C551	5thLuggCmpt.	561476	male	CS01S	Slide-OutPanel	563613	female
C551	5thLuggCmpt.	561477	female	CS02	Slide-OutPanel	561643	male
C552	3rdLuggCmpt.	561476	male	CS02	Slide-OutPanel	561641	female
C552	3rdLuggCmpt.	561477	female	CS05	Slide-OutPanel	561847	male
C553	2ndLuggCmpt.	561476	male	CS05	Slide-OutPanel	561862	female
C553	2ndLuggCmpt.	561477	female	CS07	Slide-OutPanel	562581	male
C554	1stLuggCmpt.	561476	male	CS07	Slide-OutPanel	562583	female
C554	1stLuggCmpt.	561477	female	CSo8	Slide-OutPanel	562581	male
C555	1stLuggCmpt.	561476	male	CSo8	Slide-OutPanel	562583	female
C555	1stLuggCmpt.	561477	female	CSo9	Slide-OutPanel	562581	male
C556	5thLuggCmpt.	561476	male	CSo9	Slide-OutPanel	562583	female
C556	5thLuggCmpt.	561477	female	CT2	EngineCmpt.	563226	male
C557	3rdLuggCmpt.	561476	male	CT2	EngineCmpt.	563613	female
C557	3rdLuggCmpt.	561477	female	EIA	Engine_CMPT	563739	male
C558	4thLuggCmpt	561476	male	L1	Pneumatic_Panel	562848	male
C558	4thLuggCmpt	561477	female	L16	Front_Roof	562803	male
C559	5thLuggCmpt.	561476	male	L17	Front_Roof	562803	male
C559	5thLuggCmpt.	561477	female	L18	Entrance_Door	562549	male
C617	Mirror_LH	563801	male	L19	Entrance_Door	562549	male
C617	Mirror_LH	563800	female	L21.A	FrontRoof	561608	female
C618	Mirror_RH	563801	male	L21.B	FrontRoof	562286	male
C618	Mirror_RH	563800	female	L22.A	FrontRoof	561608	female
C717	RJB	561646	male	L22.B	FrontRoof	562286	male
C717	RJB	561645	female	L23.A	FrontRoof	561608	female
C_ALT1	Engine_Cmpt	562477	male	L23.B	FrontRoof	562286	male
C_ALT1	Engine_Cmpt	562479	female	L24.A	FrontRoof	561608	female
C_ALT2	Engine_Cmpt	562477	male	L24.B	FrontRoof	562286	male
C_ALT2	Engine_Cmpt	562479	female	L25.A	FrontRoof	561608	female
CC1	ServiceCmpt.	563227	male	L25.B	FrontRoof	562286	male
CC1	ServiceCmpt.	563614	female	L26.A	FrontRoof	561608	female
CC2	ServiceCmpt.	563226	male	L26.B	FrontRoof	562286	male
CC2	ServiceCmpt.	563613	female	L27.A	FrontRoof	561608	female
CFF4_1	Slide-OutPanel	561986	male	L27.B	FrontRoof	562286	male
CFF4_1	Slide-OutPanel	561987	female	L63	Outside_Front_RH	562155	male

CONNECTORS LIST

No	Location	Part #	Gender	No	Location	Part #	Gender
L64	Outside_Front_RH	562155	male	L186.A	Service_Cmpt	562651	female
L65	Outside_Front_LH	562155	male	L186.B	Service_Cmpt	562290	female
L66	Outside_Front_LH	562155	male	L187.A	Engine_Cmpt	561690	male
L67.A	Outside_3rd_Lugg_Door_RH	562155	male	L189	Outside_Front_RH	562069	male
L68.A	Outside_3rd_Lugg_Door_RH	562155	male	L190	Outside_Front_LH	562069	male
L69.A	Outside_3rd_Lugg_Door_LH	562155	male	L193.A	Dash	560488	female
L70.A	Outside_3rd_Lugg_Door_LH	562155	male	L193.B	Dash	560488	female
L72	Rear_Vehicle	562155	male	L194.A	Dash	562019	female
L74	Rear_Vehicle	562155	male	L194.B	Dash	560488	female
L75	Rear_Vehicle	562155	male	L195.A	Dash	560488	female
L76	Rear_Engine_Door	562155	male	L195.B	Dash	560488	female
L87	Rear_Roof	562486	female	L199	Engine.Cmpt.	562848	male
L88	Rear_Roof	562486	female	L203	RightHandConsole	561690	male
L89	Rear_Roof	562486	female	L205	Evap.Cmpt.	562485	male
L90	Rear_Roof	562486	female	L211	Entrance_Door	562549	male
L93.A	Rear_Vehicle	563069	female	L282	Rear_Axle_Cmpt	561690	male
L93.B	Rear_Vehicle	563069	female	L285	Dash	561247	male
L94.A	EngineCmpt.	563069	female	L287	4thLuggCmpt	561247	male
L94.B	EngineCmpt.	563069	female	L288	4thLuggCmpt	561247	male
L95A	Outside_Front_LH	562485	male	L290	Engine_Door	562565	female
L95B	Outside_Front_LH	562485	male	L291	Engine_Door	562565	female
L96A	Outside_Front_RH	562485	male	L302	Outside_Front_RH	562789	male
L96B	Outside_Front_RH	562485	male	L303	Outside_Front_LH	562789	male
L97.A	Outside_Front_LH	563069	female	L350	Rr_Axle_Cmpt	562350	male
L97.B	Outside_Front_LH	563069	female	L350A.A	Rr_Axle_Cmpt	563340	male
L98.A	Entrance_Door	563069	female	L350A.B	Rr_Axle_Cmpt	563340	male
L98.B	Outside_Front_RH	563069	female	L350A.C	Rr_Axle_Cmpt	562350	male
L173	Engine_Cmpt	563590	female	Mo3	Dash	561667	female
L174	Engine_Cmpt	563590	female	Mo4	Dash	562076	male
L175	RJB	561247	male	Mo7	Cond_Cmpt	563691	male
L176	5thLuggCmpt.	561247	male	Mo8	Cond_Cmpt	563691	male
L177	5thLuggCmpt.	561247	male	Mo12	Evap.Cmpt.	561690	male
L178	3rdLuggCmpt.	561247	male	Mo15	Over_Head_Driver_Area	560900	female
L179	3rdLuggCmpt.	561247	male	Mo16	Over_Head_Driver_Area	560900	female
L180	2ndLuggCmpt.	561247	male	Mo17	LeftHandConsole	563626	male
L181	2ndLuggCmpt.	561247	male	Mo18	Fr_Service_Door	562474	male
L182	1stLuggCmpt.	561247	male	Mo19	Fr_Service_Door	562474	male
L183	1stLuggCmpt.	561247	male	Mo20	Fr_Service_Door	562474	male
L184	ServiceCmpt.	561247	male	Mo21	FrontRoof	561186	male
L185.A	Service_Cmpt	562651	female	Mo22	RightHandConsole	561186	male
L185.B	Service_Cmpt	562290	female	Mo24	RightHandConsole	562348	female

CONNECTORS LIST

No	Location	Part #	Gender	No	Location	Part #	Gender
Mo25	RightHandConsole	562348	female	R42	FJB	561183	male
Mo26A	Entrance_Door	564161	male	R43	FJB	561183	male
Mo27	Cond_Cmpt	563691	male	Res3	RJB	563590	female
Mo28	Cond_Cmpt	563691	male	Res4.A	RightHandConsole	563590	female
Mo37	4th_Lugg_Cmpt	564161	male	Res6	FJB	563593	female
Mo40.A	1stLuggCmpt.	561477	female	Res7.A	FJB	563590	female
Mo44	5th_Lugg_Cmpt	561477	female	Res15	RJB	561782	male
Mo50	Service_Cmpt	561690	male	Res19	Dash	563590	female
Mo51	1stLuggCmpt.	561690	male	Res20	Entrance_Door	563590	female
Mo53	RJB	561248	female	Res31	Cond_Cmpt	562350	male
Mo54	Service_Cmpt	562474	male	Res32	Cond_Cmpt	563764	female
Mo56	5th_Lugg_Cmpt	561477	female	RFF4_1	Slide-OutPanel	564496	male
Mo58	1st_Lugg_Cmpt	561477	female	RFF4_2	Slide-OutPanel	564496	male
Mo72	Entrance_Door	564161	male	RSO4_1	Slide-OutPanel	564496	male
MoFF4_1	FR_RH_Slide_Out	562485	male	RSO4_2	Slide-OutPanel	564496	male
MONITOR	Dash	561247	male	RSO4_3	Slide-OutPanel	564496	male
MoSO4_1	FR_RH_Slide_Out	562350	male	RSO4_4	Slide-OutPanel	564496	male
MoSO4_2	FR_RH_Slide_Out	562350	male	Se11.A	Cond.Cmpt.	560082	male
Pot1.A	Dash	560488	female	Se11.B	Cond.Cmpt.	560082	male
Pot1.B	Dash	560488	female	Se11.C	Cond.Cmpt.	560082	male
Pot1.C	Dash	560488	female	Se13	Engine_Cmpt	562350	male
R3	RJB	563409	male	Se14.A	Dash	561782	male
R10	Evap.Cmpt.	563409	male	Se14.B	Dash	561781	female
R12	Evap.Cmpt.	563409	male	Se16A.A	Entrance_Door	562651	female
R17	RJB	564210	male	Se16A.B	Entrance_Door	562651	female
R18	FJB	564210	male	Se17.A	RightHandConsole	562019	female
R19	FJB	564210	male	Se17.B	RightHandConsole	562019	female
R21	RJB	561183	male	Se18	Pneumatic_Panel	561566	female
R23	RightHandConsole	561183	male	Se19	Service_Cmpt	563677	male
R24	FJB	561183	male	Se20	Evap_Cmpt	562426	male
R25	RJB	561183	male	Se21	Dash	561248	female
R29	RJB	563409	male	Se23	Cond_Cmpt	563159	male
R30	RJB	564496	male	Se24	Evap_Cmpt	563159	male
R31	RJB	564496	male	Se25	PassengerArea	561248	female
R32	RJB	564496	male	Se29	Engine_Cmpt	561566	female
R33	RJB	564496	male	Se30	Engine_Door	562877	female
R34	RJB	564210	male	Se31	Compr_Door	562877	female
R36	FJB	561183	male	Se32	EngineCmpt.	563057	male
R37	FJB	561183	male	Se33	EngineCmpt.	562856	male
R38	FJB	561183	male	Se34	EngineCmpt.	563057	male
R41	FJB	561183	male	Se35	EngineCmpt.	563057	male

CONNECTORS LIST

No	Location	Part #	Gender	No	Location	Part #	Gender
Se36	Engine_Cmpt	563628	female	So29	Pneumatic_Panel	641385	male
Se37	Front_Axle_RH	641132	female	So30	Pneumatic_Panel	641385	male
Se38	Front_Axle	641132	female	So31	Pneumatic_Panel	641385	male
Se39	Rear_Axle_LH	641132	female	So32	Pneumatic_Panel	641385	male
Se40	Rear_Axle_LH	641132	female	So36	Engine_Cmpt	561690	male
Se45	ServiceCmpt.	563409	male	So38	1stLuggCmpt.	561566	female
Se46	AboveRearAxle	562348	female	SoSo9	Slide-OutPanel	564045	female
Se49	EngineCmpt.	561690	male	SoSo10	Slide-OutPanel	564045	female
Se50	Engine_Cmpt	562426	male	spBar4	Engine_Cmpt	564135	male
Se52.A	RightHandConsole	560488	female	spBar5	Engine_Cmpt	564135	male
Se52.B	RightHandConsole	560488	female	spBar6	Engine_Cmpt	564135	male
Se53	Service_Cmpt	563159	female	spBar7	Cond_Cmpt	564135	male
Se54	Service_Cmpt	563159	female	spBar19	Cond_Cmpt	564135	male
Se55	Service_Cmpt	563159	female	spBar20	Cond_Cmpt	564135	male
Se60	Service_Cmpt	563409	male	spBar21	Cond_Cmpt	564135	male
Se65	Dash	564042	female	Sw1.C258	Dash	561188	female
Se67	Service_Cmpt	563159	female	Sw1.C259	Dash	561186	male
Se69	Service_Cmpt	563159	female	Sw2	Dash	562763	male
Se_FF4_FrDn	FR_RH_Slide_Out	562477	male	Sw3	Dash	562763	male
Se_FF4_FrUp	FR_RH_Slide_Out	562477	male	Sw4	Dash	562763	male
Se_FF4_RrDn	FR_RH_Slide_Out	562477	male	Sw5	Dash	562763	male
Se_FF4_RrUp	FR_RH_Slide_Out	562477	male	Sw6	Dash	562763	male
Se_SO4_Fr	FR_RH_Slide_Out	562477	male	Sw7A	Cond_Cmpt	562877	female
Se_SO4_Rr	FR_RH_Slide_Out	562477	male	Sw7B.A	Cond_Cmpt	562485	male
SESO1	SlideOut_Panel	563159	male	Sw7B.B	Cond_Cmpt	562486	female
SESO2_SESO3	SlideOut_Fr_LH	562479	female	Sw11A	LH_Console	562763	male
shell1	FJB	562794	male	Sw14	Dash	562763	male
shell2	RightHandConsole	561889	female	Sw16	Dash	562763	male
shell3	RightHandConsole	561889	female	Sw17	Dash	562763	male
So7	ServiceCmpt.	561566	male	Sw18A	Dash	562763	male
So8	Service_Cmpt	641385	male	Sw24	Dash	562763	male
So9	Engine_Cmpt	560016	female	Sw35	LH_Console	562763	male
So11	Cond.Cmpt.	561566	female	Sw38	LeftHandConsole	562763	male
So13	Evap_Cmpt	641385	male	Sw39.A	RJB	562403	female
So21	Front_Axle_Cmpt	564046	female	Sw39.B	RJB	562403	female
So22	Front_Axle_Cmpt	564046	female	Sw40	LeftHandConsole	561690	male
So23	Rear_Axle_Cmpt	564046	female	Sw41	LeftHandConsole	562749	male
So24	Rear_Axle_Cmpt	564046	female	Sw44.A	FJB	562403	female
So28	Pneumatic_Panel	641385	male	Sw44.B	FJB	562403	female

CONNECTORS LIST

No	Location	Part #	Gender	No	Location	Part #	Gender
Sw45A.A	5nd_LH_Lugg_Door	562485	male	Sw104	Dash	562763	male
Sw45A.B	5nd_LH_Lugg_Door	562486	female	Sw107.A	LH_Console	561457	female
Sw46A.A	5nd_RH_Lugg_Door	562485	male	Sw107.B	LH_Console	561457	female
Sw46A.B	5nd_RH_Lugg_Door	562486	female	Sw107.C	LH_Console	561457	female
Sw47A.A	3d_LH_Lugg_Door	562485	male	Sw107.D	LH_Console	561457	female
Sw47A.B	3d_LH_Lugg_Door	562486	female	Sw107.E	LH_Console	561457	female
Sw48A.A	3rd_RH_Lugg_Door	562485	male	Sw107.F	LH_Console	561457	female
Sw48A.B	3rd_RH_Lugg_Door	562486	female	Sw107.G	LH_Console	561457	female
Sw49A.A	2nd_LH_Lugg_Door	562485	male	Sw107.H	LH_Console	561457	female
Sw49A.B	2nd_LH_Lugg_Door	562486	female	Sw107.J	LH_Console	561457	female
Sw50A.A	2nd_RH_Lugg_Door	562485	male	Sw107.K	LH_Console	561457	female
Sw50A.B	2nd_RH_Lugg_Door	562486	female	Sw108	LeftHandConsole	562763	male
Sw51A.A	1st_LH_Lugg_Door	562485	male	Sw116.A	4thLuggCmpt	560079	female
Sw51A.B	1st_LH_Lugg_Door	562486	female	Sw116.B	4thLuggCmpt	560079	female
Sw52A.A	1st_RH_Lugg_Door	562485	male	Sw117.A	5thLuggCmpt.	560079	female
Sw52A.B	1st_RH_Lugg_Door	562486	female	Sw117.B	5thLuggCmpt.	560079	female
Sw58	EngineCmpt.	562581	male	Sw119	Dash	562763	male
Sw59	EngineCmpt.	562485	male	Sw120	DriverArea	562237	female
Sw63A	LH_Console	562763	male	Sw122	PassengerArea	562763	male
Sw64.A	Service_Cmpt	560815	female	Sw128A.A	Evap_Cmpt	562485	male
Sw64.B	Service_Cmpt	560815	female	Sw128A.B	Evap_Cmpt	562486	female
Sw82.A	RJB	561457	female	Sw137	Dash	562763	male
Sw82.B	RJB	561457	female	Sw160	Dash	562763	male
Sw82.C	RJB	561457	female	Sw161	Dash	562763	male
Sw82.D	RJB	561457	female	SwSo1	LHFrSlideOut	561552	female
Sw83.A	Dash	560082	female	SwSo4	RHFrSlideOut	561552	female
Sw83.B	Dash	560815	female	VECF1	FJB	563186	male
Sw83.C	Dash	560082	female	VECF2	FJB	563183	male
Sw83.D	Dash	560815	female	VECF3	FJB	563185	male
Sw85	LeftHandConsole	562749	male	VECF4	FJB	563182	male
Sw99	Dash	562763	male	VECF9	FJB	563448	male
Sw100	Dash	562763	male	VECF10	FJB	563181	male
Sw102	Dash	562763	male	VECF11	FJB	563184	male
Sw103A	LH_Console	562763	male	VECF12	FJB	563187	male

CONNECTORS LIST

No	Location	Part #	Gender				
Vecr1	RJB	563186	male				
Vecr2	RJB	563183	male				
Vecr3	RJB	563185	male				
VECR4	RJB	563182	male				
Vecr9	RJB	563448	male				
Vecr10	RJB	563181	male				
VECR11	RJB	563184	male				
VECR12	RJB	563187	male				
Y80	Engiene_Cmpt	563789	male				
Y81	Cond_Cmpt	563793	male				

CONNECTORS LIST

No	Location	Part #	Gender	No	Location	Part #	Gender
A2	LH_CONSOLE	563984	male	A44.J2	FJB	563132	male
A4A.A	Service_Cmpt	562428	female	A44.J3	FJB	562957	male
A4A.B	Service_Cmpt	561188	female	A45.J1	FJB	563133	male
A5A	Service_Cmpt	562428	female	A45.J2	FJB	563132	male
A6	Rear_Axle_Cmpt	562427	male	A45.J3	FJB	562957	male
A7	Rear_Axle_Cmpt	563979	male	A46.J1	FJB	563133	male
A9.Cx1	FJB	564041	female	A46.J2	FJB	563132	male
A9.Cx2	FJB	563678	male	A46.J3	FJB	562957	male
A9.Cx3	FJB	564037	female	A47.J1	RightHandConsole	563133	male
A9.Cx4	FJB	564038	female	A47.J2	RightHandConsole	563132	male
A14A.A	Dash	562766	male	A47.J3	RightHandConsole	562957	male
A14A.B	Dash	562767	male	A48.J1	RightHandConsole	563133	male
A14A.C	Dash	562765	male	A48.J2	RightHandConsole	563132	male
A15	Dash	562464	male	A48.J3	RightHandConsole	562957	male
A18.J2	FJB	562650	male	A49.J1	RJB	562767	male
A24.A	RightHandConsole	561890	male	A49.J2	RJB	563132	male
A24.B	RightHandConsole	561566	female	A49.J3	RJB	562957	male
A27	ServiceCmpt.	562929	male	A50.J1	RJB	563133	male
A28	ServiceCmpt.	562928	male	A50.J2	RJB	563132	male
A29	Dash	562464	male	A50.J3	RJB	562957	male
A30.A	RightHandConsole	561611	male	A51.J1	RJB	563133	male
A31.J1	DASH	562780	male	A51.J2	RJB	563132	male
A31.J2	DASH	562842	male	A51.J3	RJB	562957	male
A31.J3	DASH	562464	male	A52.J1	RJB	563133	male
A31.J4	DASH	562465	male	A52.J2	RJB	563132	male
A31.J5	DASH	563071	male	A52.J3	RJB	562957	male
A32.A	1stLuggCmpt.	561611	male	A54.J1	Evap.Cmpt.	563133	male
A32.C	1stLuggCmpt.	561566	female	A54.J2	Evap.Cmpt.	563132	male
A36.JA	FJB	562767	male	A54.J3	Evap.Cmpt.	562957	male
A36.JB	FJB	562765	male	A55.J1	Dash	562767	male
A36.JC	FJB	562957	male	A55.J2	Dash	563132	male
A41.J1	FJB	562767	male	A55.J3	Dash	562957	male
A41.J2	FJB	563132	male	A77	RJB	564547	male
A41.J3	FJB	562957	male	A78	RJB	562583	female
A42.J1	FJB	562767	male	A79	RJB	562581	male
A42.J2	FJB	563132	male	A80	RJB	562477	male
A42.J3	FJB	562957	male	A81A.JA	FJB	562767	male
A43.J1	FJB	562767	male	A81A.JB	FJB	562765	male
A43.J2	FJB	563132	male	A81A.JC	FJB	562957	male
A43.J3	FJB	562957	male	A83	FJB	565970	female
A44.J1	FJB	563133	male	A96	FJB	564073	female

CONNECTORS LIST

No	Location	Part #	Gender	No	Location	Part #	Gender
A97	Dash	563226	male	C4	ServiceCmpt.	563580	male
A100	Front_Axle_Cmpt	563758	female	C4	ServiceCmpt.	563581	female
A101	Rear_Axle_Cmpt	563758	female	C5	FJB	563589	male
A102	Rear_Axle_Cmpt	563758	female	C5	FJB	563590	female
A103	Dash	562070	female	C5S	FJB	563589	male
A106	Entrance_Door	565974	male	C5S	FJB	563590	female
A115	DASH	562865	male	C6	ServiceCmpt.	563582	male
A131.A	Engine_Cmpt	561782	male	C6	ServiceCmpt.	563583	female
A131.B	Engine_Cmpt	561781	female	C7	Service_Cmpt	562581	female
A137A	Cond_Cmpt	20429843	male	C7	Service_Cmpt	562583	female
A138	Cond_Cmpt	563787	male	C8	Service_Cmpt	563227	male
A139	Dash	564501	male	C8	Service_Cmpt	563614	female
Alt1D.A	Engine_Cmpt	563746	female	C9	Evap_Cmpt	561986	male
Alt1D.B	Engine_Cmpt	560815	female	C9	Evap_Cmpt	561987	female
Alt1D.C	Engine_Cmpt	564469	female	C10	Engine_Cmpt	562581	male
Alt2D.A	Engine_Cmpt	563746	female	C10	Engine_Cmpt	562583	female
Alt2D.B	Engine_Cmpt	560815	female	C11	ServiceCmpt.	563580	male
Alt2D.C	Engine_Cmpt	564469	female	C11	ServiceCmpt.	563581	female
Alt3.A	Engine_Cmpt	563746	female	C12	RJB	561986	male
Alt3.B	Engine_Cmpt	560815	female	C12	RJB	561987	female
Alt3.C	Engine_Cmpt	564469	female	C13_plug	Right_Hand_Console	563589	male
B85	Engine_Cmpt	563815	male	C13_socket	Right_Hand_Console	563590	female
B96.J1	Engine_Cmpt	563821	male	C13S	RightHandConsole	563593	male
B96B	Engine_Cmpt	563823	male	C13S	RightHandConsole	563590	female
B97	Engine_Cmpt	563816	male	C15	5thLuggCmpt.	561646	male
B98.J1	Engine_Cmpt	563817	male	C15	5thLuggCmpt.	561645	female
B115	Engine_Cmpt	563818	female	C15B	5thLuggCmpt.	568110	male
B142C	Engine_Cmpt	563793	male	C15B	5thLuggCmpt.	568109	female
B310	Engine_Cpt	565967	male	C17	RJB	561986	male
C1	FJB	563589	male	C17	RJB	561987	female
C1	FJB	563590	female	C18	FJB	561986	male
C1S	FJB	563589	male	C18	FJB	561987	female
C1S	FJB	563590	female	C19	RJB	561986	male
C2	ServiceCmpt.	563580	male	C19	RJB	561987	female
C2	ServiceCmpt.	563581	female	C20A	Engine_Cmpt	562485	male
C2A	FJB	563580	male	C20A	Engine_Cmpt	562486	female
C2A	FJB	563581	female	C20B	Engine_Cmpt	562485	male
C3	RJB	563589	male	C20B	Engine_Cmpt	562486	female
C3	RJB	563590	female	C21A	RJB	561646	male
C3S	RJB	563593	male	C21A	RJB	561645	female
C3S	RJB	563590	female	C21B	RJB	561646	male

CONNECTORS LIST

No	Location	Part #	Gender	No	Location	Part #	Gender
C21B	RJB	561645	female	C54A	Engine.Cmpt.	561642	female
C22	RJB	561847	male	C54B	Engine.Cmpt.	562477	male
C22	RJB	561862	female	C54B	Engine.Cmpt.	562479	female
C23	Evap.Cmpt.	561847	male	C64A	Engine.Cmpt.	568110	male
C23	Evap.Cmpt.	561862	female	C64A	Engine.Cmpt.	568109	female
C24_plug	Evap.Cmpt.	561690	male	C71	FJB	561646	male
C24_socket	Evap.Cmpt.	561566	female	C71	FJB	561645	female
C26	Evap.Cmpt.	563226	male	C72	ServiceCmpt.	561646	male
C26	Evap.Cmpt.	563613	female	C72	ServiceCmpt.	561645	female
C26A	Evap.Cmpt.	563358	male	C74	ServiceCmpt.	561645	female
C26A	Evap.Cmpt.	563359	female	C74	ServiceCmpt.	561646	male
C26AA	Evap.Cmpt.	568110	male	C75	Cond_Door	561515	male
C26AA	Evap.Cmpt.	568109	female	C75	Cond_Door	561552	female
C26B	Evap.Cmpt.	563227	male	C77	Evap_Door	561515	male
C26B	Evap.Cmpt.	563614	female	C77	Evap_Door	561552	female
C27	RJB	562005	male	C81	1st_LH_Lugg_Door	561515	male
C27	RJB	561714	female	C81	1st_LH_Lugg_Door	561552	female
C28	5thLuggCmpt.	561637	male	C82	1st_RH_Lugg_Door	561515	male
C28	5thLuggCmpt.	561636	female	C82	1st_RH_Lugg_Door	561552	female
C34	RightHandConsole	561986	male	C83	2nd_LH_Lugg_Door	561515	male
C34	RightHandConsole	561987	female	C83	2nd_LH_Lugg_Door	561552	female
C35	Evap.Cmpt.	561607	male	C84	2nd_RH_Lugg_Door	561515	male
C35	Evap.Cmpt.	561606	female	C84	2nd_RH_Lugg_Door	561552	female
C36	FJB	561986	male	C85	3rd_LH_Lugg_Door	561515	male
C36	FJB	561987	female	C85	3rd_LH_Lugg_Door	561552	female
C39A	Engine.Cmpt.	561782	male	C86	3rd_RH_Lugg_Door	561515	male
C39A	Engine.Cmpt.	561781	female	C86	3rd_RH_Lugg_Door	561552	female
C40	Dash	562485	male	C87	RearRoof	563618	male
C40	Dash	562486	female	C87	RearRoof	563616	female
C44_plug	FJB	561577	male	C89	RearRoof	561581	male
C44_socket	FJB	561605	female	C89	RearRoof	561582	female
C45	FJB	561643	male	C91	RJB	562285	male
C45	FJB	561642	female	C91	RJB	562282	female
C49A	FJB	562005	male	C94_plug	FJB	563589	male
C49A	FJB	561714	female	C94_socket	FJB	563590	female
C50	RJB	561782	male	C96	FJB	561643	male
C50	RJB	561781	female	C96	FJB	561642	female
C54	Engine.Cmpt.	563226	male	C97	FJB	561643	male
C54	Engine.Cmpt.	563613	female	C97	FJB	561642	female
C54A	Engine.Cmpt.	561643	male	C98	Engine_Cmpt	563817	male

CONNECTORS LIST

No	Location	Part #	Gender	No	Location	Part #	Gender
C98	Engine_Cmpt	563830	female	C200	FJB	561606	female
C99_plug	RJB	563589	male	C200B	Engine_Cmpt	562471	male
C99_socket	RJB	563590	female	C200B	Engine_Cmpt	562348	female
C100	5thLuggCmpt.	563589	male	C222	FJB	562477	male
C100	5thLuggCmpt.	563590	female	C222	FJB	562479	female
C100A	Evap_Cmpt	563589	male	C223	FJB	563227	male
C100A	Evap_Cmpt	563590	female	C223	FJB	563614	female
C100S	5thLuggCmpt.	563589	male	C224	Dash	561637	male
C100S	5thLuggCmpt.	563590	female	C224	Dash	561636	female
C101	ServiceCmpt.	561690	male	C225	FJB	562650	male
C101	ServiceCmpt.	561566	female	C225	FJB	562649	female
C102	RJB	561690	male	C226	FJB	562650	male
C102	RJB	561566	female	C226	FJB	562649	female
C102A	RJB	561637	male	C228	EngineCmpt.	563227	male
C102A	RJB	561636	female	C228	EngineCmpt.	563614	female
C105	FJB	562581	male	C228A	EngineCmpt.	563227	male
C105	FJB	562583	female	C228A	EngineCmpt.	563614	female
C106_plug	FJB	562581	male	C228B	EngineCmpt.	562581	male
C106_socket	FJB	562583	female	C228B	EngineCmpt.	562583	female
C110A	Pneumatic_Panel	568110	male	C246	ServiceCmpt.	563090	male
C110A	Pneumatic_Panel	568109	female	C246	ServiceCmpt.	563091	female
C119A	Rear_Engine_Door	562581	male	C266	Entrance_Door	561640	male
C119A	Rear_Engine_Door	562583	female	C266	Entrance_Door	561639	female
C120A	Rear_Engine_Door	563580	male	C269	RHConsole	563090	male
C120A	Rear_Engine_Door	563581	female	C269	RHConsole	563091	female
C152	CondensorCmpt.	561611	male	C279	FJB	562477	male
C152	CondensorCmpt.	561610	female	C279	FJB	562479	female
C171	FJB	561646	male	C290	5nd_RH_Lugg_Door	561515	male
C171	FJB	561645	female	C290	5nd_RH_Lugg_Door	561552	female
C172	ServiceCmpt.	561637	male	C291	5nd_LH_Lugg_Door	561515	male
C172	ServiceCmpt.	561635	female	C291	5nd_LH_Lugg_Door	561552	female
C193	RJB	563589	male	C330	FJB	561690	male
C193	RJB	563590	female	C330	FJB	561566	female
C194	FJB	563589	male	C342	EngineCmpt.	562485	male
C194	FJB	563590	female	C342	EngineCmpt.	562486	female
C200	FJB	561607	male	C360	Dash	561247	male

CONNECTORS LIST

No	Location	Part #	Gender	No	Location	Part #	Gender
C360	Dash	561248	female	C_ALT2	Engine_Cmpt	562477	male
C380A	Dash	564222	male	C_ALT2	Engine_Cmpt	562479	female
C380A	Dash	564224	female	CC1	ServiceCmpt.	563227	male
C397	RJB	562285	male	CC1	ServiceCmpt.	563614	female
C397	RJB	562282	female	CC2	ServiceCmpt.	563226	male
C400_plu	EngineCmpt.	561782	male	CC2	ServiceCmpt.	563613	female
C400_soc	EngineCmpt.	561781	female	CFF4_1	Slide-OutPanel	561986	male
C426	Engine_Cmpt	561611	male	CFF4_1	Slide-OutPanel	561987	female
C426	Engine_Cmpt	561610	female	CFF4_2	Slide-OutPanel	561986	male
C463	Engine_Cmpt	568111	male	CFF4_2	Slide-OutPanel	561987	female
C463	Engine_Cmpt	568112	female	CFHAC	Evap_Cmpt	564238	male
C464A	RJB	564222	male	CFHF1	FJB	564560	male
C464A	RJB	564224	female	CS01	Slide-OutPanel	563226	male
C550	5thLuggCmpt.	561476	male	CS01	Slide-OutPanel	563613	female
C550	5thLuggCmpt.	561477	female	CS01S	Slide-OutPanel	563226	male
C551	5thLuggCmpt.	561476	male	CS01S	Slide-OutPanel	563613	female
C551	5thLuggCmpt.	561477	female	CS02	Slide-OutPanel	561643	male
C552	3rdLuggCmpt.	561476	male	CS02	Slide-OutPanel	561641	female
C552	3rdLuggCmpt.	561477	female	CS05	Slide-OutPanel	561847	male
C553	2ndLuggCmpt.	561476	male	CS07	Slide-OutPanel	562581	male
C553	2ndLuggCmpt.	561477	female	CS07	Slide-OutPanel	562583	female
C554	1stLuggCmpt.	561476	male	CSo8	Slide-OutPanel	562581	male
C554	1stLuggCmpt.	561477	female	CSo8	Slide-OutPanel	562583	female
C555	1stLuggCmpt.	561476	male	CSo9	Slide-OutPanel	562581	male
C555	1stLuggCmpt.	561477	female	CSo9	Slide-OutPanel	562583	female
C556	5thLuggCmpt.	561476	male	CT2	EngineCmpt.	563226	male
C556	5thLuggCmpt.	561477	female	CT2	EngineCmpt.	563613	female
C557	3rdLuggCmpt.	561476	male	EIA	Engine_CMPT	563739	male
C557	3rdLuggCmpt.	561477	female	L1	Pneumatic_Panel	562848	male
C558	4thLuggCmpt	561476	male	L16	Front_Roof	562803	male
C558	4thLuggCmpt	561477	female	L17	Front_Roof	562803	male
C559	5thLuggCmpt.	561476	male	L18	Entrance_Door	562549	male
C559	5thLuggCmpt.	561477	female	L19	Entrance_Door	562549	male
C617	Mirror_LH	563801	male	L21.A	FrontRoof	561608	female
C617	Mirror_LH	563800	female	L21.B	FrontRoof	562286	male
C618	Mirror_RH	563801	male	L22.A	FrontRoof	561608	female
C618	Mirror_RH	563800	female	L22.B	FrontRoof	562286	male
C717	RJB	561646	male	L23.A	FrontRoof	561608	female
C717	RJB	561645	female	L23.B	FrontRoof	562286	male
C_ALT1	Engine_Cmpt	562477	male	L24.A	FrontRoof	561608	female
C_ALT1	Engine_Cmpt	562479	female	L24.B	FrontRoof	562286	male

CONNECTORS LIST

No	Location	Part #	Gender	No	Location	Part #	Gender
L25.A	FrontRoof	561608	female	L180	2ndLuggCmpt.	561247	male
L25.B	FrontRoof	562286	male	L181	2ndLuggCmpt.	561247	male
L26.A	FrontRoof	561608	female	L182	1stLuggCmpt.	561247	male
L26.B	FrontRoof	562286	male	L183	1stLuggCmpt.	561247	male
L27.A	FrontRoof	561608	female	L184	ServiceCmpt.	561247	male
L27.B	FrontRoof	562286	male	L185.A	Service_Cmpt	562651	female
L63	Outside_Front_RH	562155	male	L185.B	Service_Cmpt	562290	female
L64	Outside_Front_RH	562155	male	L186.A	Service_Cmpt	562651	female
L65	Outside_Front_LH	562155	male	L186.B	Service_Cmpt	562290	female
L66	Outside_Front_LH	562155	male	L187.A	Engine_Cmpt	561690	male
L67.A	Outside_3rd_Lugg_Door_RH	562155	male	L189	Outside_Front_RH	562069	male
L68.A	Outside_3rd_Lugg_Door_RH	562155	male	L190	Outside_Front_LH	562069	male
L69.A	Outside_3rd_Lugg_Door_LH	562155	male	L193.A	Dash	560488	female
L70.A	Outside_3rd_Lugg_Door_LH	562155	male	L193.B	Dash	560488	female
L72	Rear_Vehicle	562155	male	L194.A	Dash	562019	female
L74	Rear_Vehicle	562155	male	L194.B	Dash	560488	female
L75	Rear_Vehicle	562155	male	L195.A	Dash	560488	female
L76	Rear_Engine_Door	562155	male	L195.B	Dash	560488	female
L87	Rear_Roof	562486	male	L199	Engine.Cmpt.	562848	male
L88	Rear_Roof	562486	female	L203	RightHandConsole	561690	male
L89	Rear_Roof	562486	female	L205	Evap.Cmpt.	562485	male
L90	Rear_Roof	562486	female	L211	Entrance_Door	562549	male
L93.A	Rear_Vehicle	563069	female	L282	Rear_Axle_Cmpt	561690	male
L93.B	Rear_Vehicle	563069	female	L285	Dash	561247	male
L94.A	EngineCmpt.	563069	female	L287	4thLuggCmpt	561247	male
L94.B	EngineCmpt.	563069	female	L288	4thLuggCmpt	561247	male
L95A	Outside_Front_LH	562485	male	L290	Engine_Door	562565	female
L95B	Outside_Front_LH	562485	male	L291	Engine_Door	562565	female
L96A	Outside_Front_RH	562485	male	L302	Outside_Front_RH	562789	male
L96B	Outside_Front_RH	562485	male	L303	Outside_Front_LH	562789	male
L97.A	Outside_Front_LH	563069	female	L350	Rr_Axle_Cmpt	562350	male
L97.B	Outside_Front_LH	563069	female	L350A.A	Rr_Axle_Cmpt	563340	male
L98.A	Entrance_Door	563069	female	L350A.B	Rr_Axle_Cmpt	563340	male
L98.B	Outside_Front_RH	563069	female	L350A.C	Rr_Axle_Cmpt	562350	male
L173	Engine_Cmpt	563590	female	Mo3	Dash	561667	female
L174	Engine_Cmpt	563590	female	Mo4	Dash	562076	male
L175	RJB	561247	male	Mo7	Cond_Cmpt	563691	male
L176	5thLuggCmpt.	561247	male	Mo8	Cond_Cmpt	563691	male
L177	5thLuggCmpt.	561247	male	Mo12	Evap.Cmpt.	561690	male
L178	3rdLuggCmpt.	561247	male	Mo15	Over_Head_Driver_Area	560900	female
L179	3rdLuggCmpt.	561247	male	Mo16	Over_Head_Driver_Area	560900	female

CONNECTORS LIST

No	Location	Part #	Gender	No	Location	Part #	Gender
Mo17	LeftHandConsole	563626	male	R32	RJB	564496	male
Mo18	Fr_Service_Door	562474	male	R33	RJB	564496	male
Mo19	Fr_Service_Door	562474	male	R34	RJB	564210	male
Mo20	Fr_Service_Door	562474	male	R36	FJB	561183	male
Mo21	FrontRoof	561186	male	R37	FJB	561183	male
Mo22	RightHandConsole	561186	male	R38	FJB	561183	male
Mo24	RightHandConsole	562348	female	R41	FJB	561183	male
Mo25	RightHandConsole	562348	female	R42	FJB	561183	male
Mo26A	Entrance_Door	564161	male	R43	FJB	561183	male
Mo27	Cond_Cmpt	563691	male	Res3	RJB	563590	female
Mo28	Cond_Cmpt	563691	male	Res4.A	RightHandConsole	563590	female
Mo37	4th_Lugg_Cmpt	564161	male	Res6	FJB	563593	female
Mo40.A	1stLuggCmpt.	561477	female	Res7.A	FJB	563590	female
Mo44	5th_Lugg_Cmpt	561477	female	Res15	RJB	561782	male
Mo50	Service_Cmpt	561690	male	Res19	Dash	563590	female
Mo51	1stLuggCmpt.	561690	male	Res20	Entrance_Door	563590	female
Mo53	RJB	561248	female	Res31	Cond_Cmpt	562350	male
Mo54	Service_Cmpt	562474	male	Res32	Cond_Cmpt	563764	female
Mo56	5th_Lugg_Cmpt	561477	female	Res53.A	Dash	563590	female
Mo58	1st_Lugg_Cmpt	561477	female	RFF4_1	Slide-OutPanel	564496	male
Mo72	Entrance_Door	564161	male	RFF4_2	Slide-OutPanel	564496	male
MoFF4_1	FR_RH_Slide_Out	562485	male	RSO4_1	Slide-OutPanel	564496	male
MONITOR	Dash	561247	male	RSO4_2	Slide-OutPanel	564496	male
MoSO4_1	FR_RH_Slide_Out	562350	male	RSO4_3	Slide-OutPanel	564496	male
MoSO4_2	FR_RH_Slide_Out	562350	male	RSO4_4	Slide-OutPanel	564496	male
Pot1.A	Dash	560488	female	Se11.A	Cond.Cmpt.	560082	male
Pot1.B	Dash	560488	female	Se11.B	Cond.Cmpt.	560082	male
Pot1.C	Dash	560488	female	Se11.C	Cond.Cmpt.	560082	male
R3	RJB	563409	male	Se13	Engine_Cmpt	562350	male
R10	Evap.Cmpt.	563409	male	Se14.A	Dash	561782	male
R12	Evap.Cmpt.	563409	male	Se14.B	Dash	561781	female
R17	RJB	564210	male	Se16A.A	Entrance_Door	562651	female
R18	FJB	564210	male	Se16A.B	Entrance_Door	562651	female
R19	FJB	564210	male	Se17.A	RightHandConsole	562019	female
R21	RJB	561183	male	Se17.B	RightHandConsole	562019	female
R23	RightHandConsole	561183	male	Se18	Pneumatic_Panel	561566	female
R24	FJB	561183	male	Se19	Service_Cmpt	563677	male
R25	RJB	561183	male	Se20	Evap_Cmpt	562426	male
R29	RJB	563409	male	Se21	Dash	561248	female
R30	RJB	564496	male	Se23	Cond_Cmpt	563159	male
R31	RJB	564496	male	Se24	Evap_Cmpt	563159	male

CONNECTORS LIST

No	Location	Part #	Gender	No	Location	Part #	Gender
Se25	PassengerArea	561248	female	So21	Front_Axle_Cmpt	564046	female
Se29	Engine_Cmpt	561566	female	So22	Front_Axle_Cmpt	564046	female
Se30	Engine_Door	562877	female	So23	Rear_Axle_Cmpt	564046	female
Se31	Compr_Door	562877	female	So24	Rear_Axle_Cmpt	564046	female
Se32	EngineCmpt.	563057	male	So28	Pneumatic_Panel	641385	male
Se33	EngineCmpt.	562856	male	So29	Pneumatic_Panel	641385	male
Se34	EngineCmpt.	563057	male	So30	Pneumatic_Panel	641385	male
Se35	EngineCmpt.	563057	male	So31	Pneumatic_Panel	641385	male
Se36	Engine_Cmpt	563628	female	So32	Pneumatic_Panel	641385	male
Se37	Front_Axle_RH	641132	female	So36	Engine_Cmpt	561690	male
Se38	Front_Axle	641132	female	So38	1stLuggCmpt.	561566	female
Se39	Rear_Axle_LH	641132	female	SoSo9	Slide-OutPanel	564045	female
Se40	Rear_Axle_LH	641132	female	SoSo10	Slide-OutPanel	564045	female
Se45	ServiceCmpt.	563409	male	spBar4	Engine_Cmpt	564135	male
Se46	AboveRearAxle	562348	female	spBar5	Engine_Cmpt	564135	male
Se50	Engine_Cmpt	562426	male	spBar6	Engine_Cmpt	564135	male
Se52.A	RightHandConsole	560488	female	spBar7	Cond_Cmpt	564135	male
Se52.B	RightHandConsole	560488	female	spBar19	Cond_Cmpt	564135	male
Se53	Service_Cmpt	563159	female	spBar20	Cond_Cmpt	564135	male
Se54	Service_Cmpt	563159	female	spBar21	Cond_Cmpt	564135	male
Se55	Service_Cmpt	563159	female	Sw1.C258	Dash	561188	female
Se60	Service_Cmpt	563409	male	Sw1.C259	Dash	561186	male
Se65	Dash	564042	female	Sw2	Dash	562763	male
Se67	Service_Cmpt	563159	female	Sw3	Dash	562763	male
Se69	Service_Cmpt	563159	female	Sw4	Dash	562763	male
Se_FF4_FrDr	FR_RH_Slide_Out	562477	male	Sw5	Dash	562763	male
Se_FF4_FrUp	FR_RH_Slide_Out	562477	male	Sw6	Dash	562763	male
Se_FF4_RrDr	FR_RH_Slide_Out	562477	male	Sw7A	Cond_Cmpt	562877	female
Se_FF4_RrUp	FR_RH_Slide_Out	562477	male	Sw7B.A	Cond_Cmpt	562485	male
Se_SO4_Fr	FR_RH_Slide_Out	562477	male	Sw7B.B	Cond_Cmpt	562486	female
Se_SO4_Rr	FR_RH_Slide_Out	562477	male	Sw11A	LH_Console	562763	male
SESO1	SlideOut_Panel	563159	male	Sw14	Dash	562763	male
SESO2_SESO	SlideOut_Fr_LH	562479	female	Sw16	Dash	562763	male
shell1	FJB	562794	male	Sw17	Dash	562763	male
shell2	RightHandConsole	561889	female	Sw18A	Dash	562763	male
shell3	RightHandConsole	561889	female	Sw24	Dash	562763	male
So7	ServiceCmpt.	561566	male	Sw35	LH_Console	562763	male
So8	Service_Cmpt	641385	male	Sw38	LeftHandConsole	562763	male
So9	Engine_Cmpt	560016	female	Sw39.A	RJB	562403	female
So11	Cond.Cmpt.	561566	female	Sw39.B	RJB	562403	female
So13	Evap_Cmpt	641385	male	Sw40	LeftHandConsole	561690	male

CONNECTORS LIST

No	Location	Part #	Gender	No	Location	Part #	Gender
Sw41	LeftHandConsole	562749	male	Sw107.D	LH_Console	561457	female
Sw44.A	FJB	562403	female	Sw107.E	LH_Console	561457	female
Sw44.B	FJB	562403	female	Sw107.F	LH_Console	561457	female
Sw45A.A	5nd_LH_Lugg_Door	562485	male	Sw107.G	LH_Console	561457	female
Sw45A.B	5nd_LH_Lugg_Door	562486	female	Sw107.H	LH_Console	561457	female
Sw46A.A	5nd_RH_Lugg_Door	562485	male	Sw107.J	LH_Console	561457	female
Sw46A.B	5nd_RH_Lugg_Door	562486	female	Sw107.K	LH_Console	561457	female
Sw47A.A	3d_LH_Lugg_Door	562485	male	Sw108	LeftHandConsole	562763	male
Sw47A.B	3d_LH_Lugg_Door	562486	female	Sw116.A	4thLuggCmpt	560079	female
Sw48A.A	3rd_RH_Lugg_Door	562485	male	Sw116.B	4thLuggCmpt	560079	female
Sw48A.B	3rd_RH_Lugg_Door	562486	female	Sw117.A	5thLuggCmpt.	560079	female
Sw49A.A	2nd_LH_Lugg_Door	562485	male	Sw117.B	5thLuggCmpt.	560079	female
Sw49A.B	2nd_LH_Lugg_Door	562486	female	Sw119	Dash	562763	male
Sw50A.A	2nd_RH_Lugg_Door	562485	male	Sw120	DriverArea	562237	female
Sw50A.B	2nd_RH_Lugg_Door	562486	female	Sw122	PassengerArea	562763	male
Sw51A.A	1st_LH_Lugg_Door	562485	male	Sw128A.A	Evap_Cmpt	562485	male
Sw51A.B	1st_LH_Lugg_Door	562486	female	Sw128A.B	Evap_Cmpt	562486	female
Sw52A.A	1st_RH_Lugg_Door	562485	male	Sw137	Dash	562763	male
Sw52A.B	1st_RH_Lugg_Door	562486	female	Sw160	Dash	562763	male
Sw58	EngineCmpt.	562581	male	Sw161	Dash	562763	male
Sw59	EngineCmpt.	562485	male	SwSo1	SlideOut_Fr_LH	561552	female
Sw63A	LH_Console	562763	male	SwSo4	RHFrSlideOut	561552	female
Sw64.A	Service_Cmpt	560815	female	VECF1	FJB	563186	male
Sw64.B	Service_Cmpt	560815	female	VECF2	FJB	563183	male
Sw82.A	RJB	561457	female	VECF3	FJB	563185	male
Sw82.B	RJB	561457	female	VECF4	FJB	563182	male
Sw82.C	RJB	561457	female	VECF9	FJB	563448	male
Sw82.D	RJB	561457	female	VECF10	FJB	563181	male
Sw83.A	Dash	560082	female	VECF11	FJB	563184	male
Sw83.B	Dash	560815	female	VECF12	FJB	563187	male
Sw83.C	Dash	560082	female	Vecr1	RJB	563186	male
Sw83.D	Dash	560815	female	Vecr2	RJB	563183	male
Sw85	LeftHandConsole	562749	male	Vecr3	RJB	563185	male
Sw99	Dash	562763	male	VECR4	RJB	563182	male
Sw100	Dash	562763	male	Vecr9	RJB	563448	male
Sw102	Dash	562763	male	Vecr10	RJB	563181	male
Sw103A	LH_Console	562763	male	VECR11	RJB	563184	male
Sw104	Dash	562763	male	VECR12	RJB	563187	male
Sw107.A	LH_Console	561457	female	Y80	Engiene_Cmpt	563789	male
Sw107.B	LH_Console	561457	female	Y81	Cond_Cmpt	563793	male
Sw107.C	LH_Console	561457	female				

CONNECTORS LIST

No	Location	Part #	Gender	No	Location	Part #	Gender
A2	LH_CONSOLE	563984	male	A45.J1	FJB	563133	male
A4A.A	Service_Cmpt	562428	female	A45.J2	FJB	563132	male
A4A.B	Service_Cmpt	561188	female	A45.J3	FJB	562957	male
A5A	Service_Cmpt	562428	female	A46.J1	FJB	563133	male
A6	Rear_Axle_Cmpt	562427	male	A46.J2	FJB	563132	male
A7	Rear_Axle_Cmpt	563979	male	A46.J3	FJB	562957	male
A9.Cx1	FJB	564041	female	A47.J1	RightHandConsole	563133	male
A9.Cx2	FJB	563678	male	A47.J2	RightHandConsole	563132	male
A9.Cx3	FJB	564037	female	A47.J3	RightHandConsole	562957	male
A9.Cx4	FJB	564038	female	A48.J1	RightHandConsole	563133	male
A14A.A	Dash	562766	male	A48.J2	RightHandConsole	563132	male
A14A.B	Dash	562767	male	A48.J3	RightHandConsole	562957	male
A14A.C	Dash	562765	male	A49.J1	RJB	562767	male
A15	Dash	562464	male	A49.J2	RJB	563132	male
A18.J2	FJB	562650	male	A49.J3	RJB	562957	male
A24.A	RightHandConsole	561890	male	A50.J1	RJB	563133	male
A24.B	RightHandConsole	561566	female	A50.J2	RJB	563132	male
A27	ServiceCmpt.	562929	male	A50.J3	RJB	562957	male
A28	ServiceCmpt.	562928	male	A51.J1	RJB	563133	male
A29	Dash	562464	male	A51.J2	RJB	563132	male
A30.A	RightHandConsole	561611	male	A51.J3	RJB	562957	male
A31.J1	DASH	562780	male	A52.J1	RJB	563133	male
A31.J2	DASH	562842	male	A52.J2	RJB	563132	male
A31.J3	DASH	562464	male	A52.J3	RJB	562957	male
A31.J4	DASH	562465	male	A54.J1	Evap.Cmpt.	563133	male
A31.J5	DASH	563071	male	A54.J2	Evap.Cmpt.	563132	male
A32.A	1stLuggCmpt.	561611	male	A54.J3	Evap.Cmpt.	562957	male
A32.C	1stLuggCmpt.	561566	female	A55.J1	Dash	562767	male
A36.JA	FJB	562767	male	A55.J2	Dash	563132	male
A36.JB	FJB	562765	male	A55.J3	Dash	562957	male
A36.JC	FJB	562957	male	A77	RJB	564547	male
A41.J1	FJB	562767	male	A78	RJB	562583	female
A41.J2	FJB	563132	male	A79	RJB	562581	male
A41.J3	FJB	562957	male	A80	RJB	562477	male
A42.J1	FJB	562767	male	A81A.JA	FJB	562767	male
A42.J2	FJB	563132	male	A81A.JB	FJB	562765	male
A42.J3	FJB	562957	male	A81A.JC	FJB	562957	male
A43.J1	FJB	562767	male	A83	FJB	565970	female
A43.J2	FJB	563132	male	A96	FJB	564073	female
A43.J3	FJB	562957	male	A97	Dash	563226	male
A44.J1	FJB	563133	male	A100	Front_Axle_Cmpt	563758	female
A44.J2	FJB	563132	male	A101	Rear_Axle_Cmpt	563758	female
A44.J3	FJB	562957	male	A102	Rear_Axle_Cmpt	563758	female

CONNECTORS LIST

No	Location	Part #	Gender	No	Location	Part #	Gender
A103	Dash	562070	female	C2A	FJB	563580	male
A106	Entrance_Door	565974	male	C2A	FJB	563581	female
A115	DASH	562865	male	C3	RJB	563589	male
A131.A	Engine_Cmpt	561782	male	C3	RJB	563590	female
A131.B	Engine_Cmpt	561781	female	C3S	RJB	563593	male
A137A	Cond_Cmpt	20429843	male	C3S	RJB	563590	female
A138	Cond_Cmpt	563787	male	C4	ServiceCmpt.	563580	male
A139	Dash	564501	male	C4	ServiceCmpt.	563581	female
AE56.J1	Slide-OutPanel	563679	male	C5	FJB	563589	male
AE56.J2	Slide-OutPanel	564037	male	C5	FJB	563590	female
AE56.J3	Slide-OutPanel	565957	male	C5S	FJB	563589	male
AE57.J1	Slide-OutPanel	563679	male	C5S	FJB	563590	female
AE57.J2	Slide-OutPanel	564037	male	C6	ServiceCmpt.	563582	male
AE57.J3	Slide-OutPanel	565957	male	C6	ServiceCmpt.	563583	female
AE58.J1	Slide-OutPanel	563679	male	C7	Service_Cmpt	562581	female
AE58.J2	Slide-OutPanel	564037	male	C7	Service_Cmpt	562583	female
AE58.J3	Slide-OutPanel	565957	male	C8	Service_Cmpt	563227	male
AE59.J1	Slide-OutPanel	563679	male	C8	Service_Cmpt	563614	female
AE59.J2	Slide-OutPanel	564037	male	C9	Evap_Cmpt	561986	male
AE59.J3	Slide-OutPanel	565957	male	C9	Evap_Cmpt	561987	female
Alt1D.A	Engine_Cmpt	563746	female	C10	Engine_Cmpt	562581	male
Alt1D.B	Engine_Cmpt	560815	female	C10	Engine_Cmpt	562583	female
Alt1D.C	Engine_Cmpt	564469	female	C11	ServiceCmpt.	563580	male
Alt2D.A	Engine_Cmpt	563746	female	C11	ServiceCmpt.	563581	female
Alt2D.B	Engine_Cmpt	560815	female	C12	RJB	561986	male
Alt2D.C	Engine_Cmpt	564469	female	C12	RJB	561987	female
Alt3.A	Engine_Cmpt	563746	female	C13_plug	Right_Hand_Console	563589	male
Alt3.B	Engine_Cmpt	560815	female	C13_socket	Right_Hand_Console	563590	female
Alt3.C	Engine_Cmpt	564469	female	C13S	RightHandConsole	563593	male
B85	Engine_Cmpt	563815	male	C13S	RightHandConsole	563590	female
B96.J1	Engine_Cmpt	563821	male	C15	5thLuggCmpt.	561646	male
B96B	Engine_Cmpt	563823	male	C15	5thLuggCmpt.	561645	female
B97	Engine_Cmpt	563816	male	C15B	5thLuggCmpt.	568110	male
B98.J1	Engine_Cmpt	563817	male	C15B	5thLuggCmpt.	568109	female
B115	Engine_Cmpt	563818	female	C17	RJB	561986	male
B142C	Engine_Cmpt	563793	male	C17	RJB	561987	female
B310	Engine_Cpt	565967	male	C18	FJB	561986	male
C1	FJB	563589	male	C18	FJB	561987	female
C1	FJB	563590	female	C19	RJB	561986	male
C1S	FJB	563589	male	C19	RJB	561987	female
C1S	FJB	563590	female	C20A	Engine_Cmpt	562485	male
C2	ServiceCmpt.	563580	male	C20A	Engine_Cmpt	562486	female
C2	ServiceCmpt.	563581	female	C20B	Engine_Cmpt	562485	male

CONNECTORS LIST

No	Location	Part #	Gender	No	Location	Part #	Gender
C20B	Engine_Cmpt	562486	female	C54B	Engine.Cmpt.	562477	male
C21A	RJB	561646	male	C54B	Engine.Cmpt.	562479	female
C21A	RJB	561645	female	C64A	Engine.Cmpt.	568110	male
C21B	RJB	561646	male	C64A	Engine.Cmpt.	568109	female
C21B	RJB	561645	female	C71	FJB	561646	male
C22	RJB	561847	male	C71	FJB	561645	female
C22	RJB	561862	female	C72	ServiceCmpt.	561646	male
C23	Evap.Cmpt.	561847	male	C72	ServiceCmpt.	561645	female
C23	Evap.Cmpt.	561862	female	C74	ServiceCmpt.	561645	female
C24_plug	Evap.Cmpt.	561690	male	C74	ServiceCmpt.	561646	male
C24_socket	Evap.Cmpt.	561566	female	C75	Cond_Door	561515	male
C26	Evap.Cmpt.	563226	male	C75	Cond_Door	561552	female
C26	Evap.Cmpt.	563613	female	C77	Evap_Door	561515	male
C26AA	Evap.Cmpt.	568110	male	C77	Evap_Door	561552	female
C26AA	Evap.Cmpt.	568109	female	C81	1st_LH_Lugg_Door	561515	male
C26B	Evap.Cmpt.	563227	male	C81	1st_LH_Lugg_Door	561552	female
C26B	Evap.Cmpt.	563614	female	C82	1st_RH_Lugg_Door	561515	male
C27	RJB	562005	male	C82	1st_RH_Lugg_Door	561552	female
C27	RJB	561714	female	C83	2nd_LH_Lugg_Door	561515	male
C28	5thLuggCmpt.	561637	male	C83	2nd_LH_Lugg_Door	561552	female
C28	5thLuggCmpt.	561636	female	C84	2nd_RH_Lugg_Door	561515	male
C34	RightHandConsole	561986	male	C84	2nd_RH_Lugg_Door	561552	female
C34	RightHandConsole	561987	female	C85	3rd_LH_Lugg_Door	561515	male
C35	Evap.Cmpt.	561607	male	C85	3rd_LH_Lugg_Door	561552	female
C35	Evap.Cmpt.	561606	female	C86	3rd_RH_Lugg_Door	561515	male
C36	FJB	561986	male	C86	3rd_RH_Lugg_Door	561552	female
C36	FJB	561987	female	C87	RearRoof	563618	male
C39A	Engine.Cmpt.	561782	male	C87	RearRoof	563616	female
C39A	Engine.Cmpt.	561781	female	C89	RearRoof	561581	male
C40	Dash	562485	male	C89	RearRoof	561582	female
C40	Dash	562486	female	C91	RJB	562285	male
C44_plug	FJB	561577	male	C91	RJB	562282	female
C44_socket	FJB	561605	female	C92L	Driver_Area	561690	male
C45	FJB	561643	male	C92L	Driver_Area	561566	female
C45	FJB	561642	female	C92R	Driver_Area	561690	male
C49A	FJB	562005	male	C92R	Driver_Area	561566	female
C49A	FJB	561714	female	C94_plug	FJB	563589	male
C50	RJB	561782	male	C94_socket	FJB	563590	female
C50	RJB	561781	female	C96	FJB	561643	male
C54	Engine.Cmpt.	563226	male	C96	FJB	561642	female
C54	Engine.Cmpt.	563613	female	C97	FJB	561643	male
C54A	Engine.Cmpt.	561643	male	C97	FJB	561642	female
C54A	Engine.Cmpt.	561642	female	C99_plug	RJB	563589	male

CONNECTORS LIST

No	Location	Part #	Gender	No	Location	Part #	Gender
C99_socket	RJB	563590	female	C225	FJB	562650	male
C100	5thLuggCmpt.	563589	male	C225	FJB	562649	female
C100	5thLuggCmpt.	563590	female	C226	FJB	562650	male
C100A	Evap_Cmpt	563589	male	C226	FJB	562649	female
C100A	Evap_Cmpt	563590	female	C228A	EngineCmpt.	563227	male
C100S	5thLuggCmpt.	563589	male	C228A	EngineCmpt.	563614	female
C100S	5thLuggCmpt.	563590	female	C228B	EngineCmpt.	562581	male
C101	ServiceCmpt.	561690	male	C228B	EngineCmpt.	562583	female
C101	ServiceCmpt.	561566	female	C266	Entrance_Door	561640	male
C102	RJB	561690	male	C266	Entrance_Door	561639	female
C102	RJB	561566	female	C279	FJB	562477	male
C102A	RJB	561637	male	C279	FJB	562479	female
C102A	RJB	561636	female	C290	5nd_RH_Lugg_Door	561515	male
C105	FJB	562581	male	C290	5nd_RH_Lugg_Door	561552	female
C105	FJB	562583	female	C291	5nd_LH_Lugg_Door	561515	male
C106_plug	FJB	562581	male	C291	5nd_LH_Lugg_Door	561552	female
C106_socket	FJB	562583	female	C330	FJB	561690	male
C110A	Pneumatic_Panel	568110	male	C330	FJB	561566	female
C110A	Pneumatic_Panel	568109	female	C342	EngineCmpt.	562485	male
C119A	Rear_Engine_Door	562581	male	C342	EngineCmpt.	562486	female
C119A	Rear_Engine_Door	562583	female	C360	Dash	561247	male
C120A	Rear_Engine_Door	563580	male	C360	Dash	561248	female
C120A	Rear_Engine_Door	563581	female	C380A	Dash	564222	male
C152	CondensorCmpt.	561611	male	C380A	Dash	564224	female
C152	CondensorCmpt.	561610	female	C397	RJB	562285	male
C171	FJB	561646	male	C397	RJB	562282	female
C171	FJB	561645	female	C400_plug	EngineCmpt.	561782	male
C172	ServiceCmpt.	561637	male	C400_socket	EngineCmpt.	561781	female
C172	ServiceCmpt.	561635	female	C426	Engine_Cmpt	561611	male
C193	RJB	563589	male	C426	Engine_Cmpt	561610	female
C193	RJB	563590	female	C463	Engine_Cmpt	568111	male
C194	FJB	563589	male	C463	Engine_Cmpt	568112	female
C194	FJB	563590	female	C464A	RJB	564222	male
C200	FJB	561607	male	C464A	RJB	564224	female
C200	FJB	561606	female	C550	5thLuggCmpt.	561476	male
C200B	Engine_Cmpt	562471	male	C550	5thLuggCmpt.	561477	female
C200B	Engine_Cmpt	562348	female	C551	5thLuggCmpt.	561476	male
C222	FJB	562477	male	C551	5thLuggCmpt.	561477	female
C222	FJB	562479	female	C552	3rdLuggCmpt.	561476	male
C223	FJB	563227	male	C552	3rdLuggCmpt.	561477	female
C223	FJB	563614	female	C553	2ndLuggCmpt.	561476	male
C224	Dash	561637	male	C553	2ndLuggCmpt.	561477	female
C224	Dash	561636	female	C554	1stLuggCmpt.	561476	male

CONNECTORS LIST

No	Location	Part #	Gender	No	Location	Part #	Gender
C554	1stLuggCmpt.	561477	female	CSo8	Slide-OutPanel	562581	male
C555	1stLuggCmpt.	561476	male	CSo8	Slide-OutPanel	562583	female
C555	1stLuggCmpt.	561477	female	CSo9	Slide-OutPanel	562581	male
C556	5thLuggCmpt.	561476	male	CSo9	Slide-OutPanel	562583	female
C556	5thLuggCmpt.	561477	female	CT2	EngineCmpt.	563226	male
C557	3rdLuggCmpt.	561476	male	CT2	EngineCmpt.	563613	female
C557	3rdLuggCmpt.	561477	female	EIA	Engine_CMPT	563739	male
C558	4thLuggCmpt	561476	male	L1	Pneumatic_Panel	562848	male
C558	4thLuggCmpt	561477	female	L16	Front_Roof	562803	male
C559	5thLuggCmpt.	561476	male	L17	Front_Roof	562803	male
C559	5thLuggCmpt.	561477	female	L18	Entrance_Door	562549	male
C617	Mirror_LH	563801	male	L18s.A	Entrance_Door	562549	male
C617	Mirror_LH	563800	female	L19	Entrance_Door	562549	male
C618	Mirror_RH	563801	male	L21.A	FrontRoof	561608	female
C618	Mirror_RH	563800	female	L21.B	FrontRoof	562286	male
C717	RJB	561646	male	L22.A	FrontRoof	561608	female
C717	RJB	561645	female	L22.B	FrontRoof	562286	male
C_ALT1	Engine_Cmpt	562477	male	L23.A	FrontRoof	561608	female
C_ALT1	Engine_Cmpt	562479	female	L23.B	FrontRoof	562286	male
C_ALT2	Engine_Cmpt	562477	male	L24.A	FrontRoof	561608	female
C_ALT2	Engine_Cmpt	562479	female	L24.B	FrontRoof	562286	male
CC1	ServiceCmpt.	563227	male	L25.A	FrontRoof	561608	female
CC1	ServiceCmpt.	563614	female	L25.B	FrontRoof	562286	male
CC2	ServiceCmpt.	563226	male	L26.A	FrontRoof	561608	female
CC2	ServiceCmpt.	563613	female	L26.B	FrontRoof	562286	male
CFA31M	RH_Console	562350	male	L27.A	FrontRoof	561608	female
CFA31M	RH_Console	563764	female	L27.B	FrontRoof	562286	male
CFF4_1	Slide-OutPanel	561986	male	L63	Outside_Front_RH	562155	male
CFF4_1	Slide-OutPanel	561987	female	L64	Outside_Front_RH	562155	male
CFF4_2	Slide-OutPanel	561986	male	L65	Outside_Front_LH	562155	male
CFF4_2	Slide-OutPanel	561987	female	L66	Outside_Front_LH	562155	male
CFHAC	Evap_Cmpt	564238	male	L67.A	Outside_3rd_Lugg_Door_RH	562155	male
CFHF1	FJB	564560	male	L68.A	Outside_3rd_Lugg_Door_RH	562155	male
CS01	Slide-OutPanel	563226	male	L69.A	Outside_3rd_Lugg_Door_LH	562155	male
CS01	Slide-OutPanel	563613	female	L70.A	Outside_3rd_Lugg_Door_LH	562155	male
CS01S	Slide-OutPanel	563226	male	L72	Rear_Vehicle	562155	male
CS01S	Slide-OutPanel	563613	female	L74	Rear_Vehicle	562155	male
CS02	Slide-OutPanel	561643	male	L75	Rear_Vehicle	562155	male
CS02	Slide-OutPanel	561641	female	L76	Rear_Engine_Door	562155	male
CS05	Slide-OutPanel	561847	male	L87	Rear_Roof	562486	female
CS05	Slide-OutPanel	561862	female	L87A.A	Rear_Roof	561608	female
CS07	Slide-OutPanel	562581	male	L87A.B	Rear_Roof	562286	male
CS07	Slide-OutPanel	562583	female	L88	Rear_Roof	562486	female

CONNECTORS LIST

No	Location	Part #	Gender	No	Location	Part #	Gender
L88A.A	Rear_Roof	561608	female	L195.A	Dash	560488	female
L88A.B	Rear_Roof	562286	male	L195.B	Dash	560488	female
L89	Rear_Roof	562486	female	L199	Engine.Cmpt.	562848	male
L89A.A	Rear_Roof	561608	female	L203	RightHandConsole	561690	male
L89A.B	Rear_Roof	562286	male	L205	Evap.Cmpt.	562485	male
L90	Rear_Roof	562486	female	L211	Entrance_Door	562549	male
L90A.A	Rear_Roof	561608	female	L282	Rear_Axle_Cmpt	561690	male
L90A.B	Rear_Roof	562286	male	L285	Dash	561247	male
L93.A	Rear_Vehicle	563069	female	L287	4thLuggCmpt	561247	male
L93.B	Rear_Vehicle	563069	female	L288	4thLuggCmpt	561247	male
L94.A	EngineCmpt.	563069	female	L290	Engine_Door	562565	female
L94.B	EngineCmpt.	563069	female	L291	Engine_Door	562565	female
L95A	Outside_Front_LH	562485	male	L302	Outside_Front_RH	562789	male
L95B	Outside_Front_LH	562485	male	L303	Outside_Front_LH	562789	male
L96A	Outside_Front_RH	562485	male	L350	Rr_Axle_Cmpt	562350	male
L96B	Outside_Front_RH	562485	male	L350A.A	Rr_Axle_Cmpt	563340	male
L97.A	Outside_Front_LH	563069	female	L350A.B	Rr_Axle_Cmpt	563340	male
L97.B	Outside_Front_LH	563069	female	L350A.C	Rr_Axle_Cmpt	562350	male
L98.A	Entrance_Door	563069	female	Mo3	Dash	561667	female
L98.B	Outside_Front_RH	563069	female	Mo4	Dash	562076	male
L173	Engine_Cmpt	563590	female	Mo7	Cond_Cmpt	563691	male
L174	Engine_Cmpt	563590	female	Mo8	Cond_Cmpt	563691	male
L175	RJB	561247	male	Mo12	Evap.Cmpt.	561690	male
L176	5thLuggCmpt.	561247	male	Mo15	Over_Head_Driver_Area	560900	female
L177	5thLuggCmpt.	561247	male	Mo16	Over_Head_Driver_Area	560900	female
L178	3rdLuggCmpt.	561247	male	Mo17	LeftHandConsole	563626	male
L179	3rdLuggCmpt.	561247	male	Mo18	Fr_Service_Door	562474	male
L180	2ndLuggCmpt.	561247	male	Mo19	Fr_Service_Door	562474	male
L181	2ndLuggCmpt.	561247	male	Mo20	Fr_Service_Door	562474	male
L182	1stLuggCmpt.	561247	male	Mo21	FrontRoof	561186	male
L183	1stLuggCmpt.	561247	male	Mo22	RightHandConsole	561186	male
L184	ServiceCmpt.	561247	male	Mo24	RightHandConsole	562348	female
L185.A	Service_Cmpt	562651	female	Mo25	RightHandConsole	562348	female
L185.B	Service_Cmpt	562290	female	Mo26A	Entrance_Door	564161	male
L186.A	Service_Cmpt	562651	female	Mo27	Cond_Cmpt	563691	male
L186.B	Service_Cmpt	562290	female	Mo28	Cond_Cmpt	563691	male
L187.A	Engine_Cmpt	561690	male	Mo37	4th_Lugg_Cmpt	564161	male
L189	Outside_Front_RH	562069	male	Mo40.A	1stLuggCmpt.	561477	female
L190	Outside_Front_LH	562069	male	Mo44	5th_Lugg_Cmpt	561477	female
L193.A	Dash	560488	female	Mo50	Service_Cmpt	561690	male
L193.B	Dash	560488	female	Mo51	1stLuggCmpt.	561690	male
L194.A	Dash	562019	female	Mo53	RJB	561248	female
L194.B	Dash	560488	female	Mo54	Service_Cmpt	562474	male

CONNECTORS LIST

No	Location	Part #	Gender	No	Location	Part #	Gender
Mo56	5th_Lugg_Cmpt	561477	female	Res20	Entrance_Door	563590	female
Mo58	1st_Lugg_Cmpt	561477	female	Res31	Cond_Cmpt	562350	male
Mo60	DriverArea	561566	female	Res32	Cond_Cmpt	563764	female
Mo61	DriverArea	561566	female	Res53	Dash	563590	female
Mo72	Entrance_Door	564161	male	RFF4_1	Slide-OutPanel	564496	male
MoFF4_1	FR_RH_Slide_Out	562485	male	RFF4_2	Slide-OutPanel	564496	male
MONITOR	Dash	561247	male	RSO1_1	Slide-OutPanel	564496	male
MoSO1_1	FR_LH_Slide_Out	561967	male	RSO1_2	Slide-OutPanel	564496	male
MoSO2_1	RR_LH_Slide_Out	561967	male	RSO2_1	Slide-OutPanel	564496	male
MoSO3_1	RR_RH_Slide_Out	561967	male	RSO2_2	Slide-OutPanel	564496	male
MoSO4_1	FR_RH_Slide_Out	562350	male	RSO3_1	Slide-OutPanel	564496	male
MoSO4_2	FR_RH_Slide_Out	562350	male	RSO3_2	Slide-OutPanel	564496	male
Pot1.A	Dash	560488	female	RSO4_1	Slide-OutPanel	564496	male
Pot1.B	Dash	560488	female	RSO4_2	Slide-OutPanel	564496	male
Pot1.C	Dash	560488	female	RSO4_3	Slide-OutPanel	564496	male
R3	RJB	563409	male	RSO4_4	Slide-OutPanel	564496	male
R10	Evap.Cmpt.	563409	male	Se11.A	Cond.Cmpt.	560082	male
R12	Evap.Cmpt.	563409	male	Se11.B	Cond.Cmpt.	560082	male
R17	RJB	564210	male	Se11.C	Cond.Cmpt.	560082	male
R18	FJB	564210	male	Se13	Engine_Cmpt	562350	male
R19	FJB	564210	male	Se14.A	Dash	561782	male
R21	RJB	561183	male	Se14.B	Dash	561781	female
R23	RightHandConsole	561183	male	Se16A.A	Entrance_Door	562651	female
R24	FJB	561183	male	Se16A.B	Entrance_Door	562651	female
R25	RJB	561183	male	Se17.A	RightHandConsole	562019	female
R29	RJB	563409	male	Se17.B	RightHandConsole	562019	female
R30	RJB	564496	male	Se18	Pneumatic_Panel	561566	female
R31	RJB	564496	male	Se19	Service_Cmpt	563677	male
R32	RJB	564496	male	Se20	Evap_Cmpt	562426	male
R33	RJB	564496	male	Se21	Dash	561248	female
R34	RJB	564210	male	Se23	Cond_Cmpt	563159	male
R36	FJB	561183	male	Se24	Evap_Cmpt	563159	male
R37	FJB	561183	male	Se25	PassengerArea	561248	female
R38	FJB	561183	male	Se29	Engine_Cmpt	561566	female
R41	FJB	561183	male	Se30	Engine_Door	562877	female
R42	FJB	561183	male	Se31	Compr_Door	562877	female
R43	FJB	561183	male	Se32	EngineCmpt.	563057	male
Res3	RJB	563590	female	Se33	EngineCmpt.	562856	male
Res4.A	RightHandConsole	563590	female	Se34	EngineCmpt.	563057	male
Res6	FJB	563593	female	Se35	EngineCmpt.	563057	male
Res7.A	FJB	563590	female	Se36	Engine_Cmpt	563628	female
Res15	RJB	561782	male	Se37	Front_Axle_RH	641132	female
Res19	Dash	563590	female	Se38	Front_Axle	641132	female

CONNECTORS LIST

No	Location	Part #	Gender	No	Location	Part #	Gender
Se39	Rear_Axle_LH	641132	female	So36	Engine_Cmpt	561690	male
Se40	Rear_Axle_LH	641132	female	So38	1stLuggCmpt.	561566	female
Se45	ServiceCmpt.	563409	male	SoSo1	Slide-OutPanel	564045	female
Se46	AboveRearAxle	562348	female	SoSo2	Slide-OutPanel	564045	female
Se49	EngineCmpt.	561690	male	SoSo4	Slide-OutPanel	564045	female
Se49A	Engine_Cmpt	563677	male	SoSo5	Slide-OutPanel	564045	female
Se50	Engine_Cmpt	562426	male	SoSo7	Slide-OutPanel	564045	female
Se52.A	RightHandConsole	560488	female	SoSo8	Slide-OutPanel	564045	female
Se52.B	RightHandConsole	560488	female	SoSo9	Slide-OutPanel	564045	female
Se53	Service_Cmpt	563159	female	SoSo10	Slide-OutPanel	564045	female
Se54	Service_Cmpt	563159	female	spBar4	Engine_Cmpt	564135	male
Se55	Service_Cmpt	563159	female	spBar5	Engine_Cmpt	564135	male
Se60	Service_Cmpt	563409	male	spBar6	Engine_Cmpt	564135	male
Se65	Dash	564042	female	spBar7	Cond_Cmpt	564135	male
Se67	Service_Cmpt	563159	female	spBar19	Cond_Cmpt	564135	male
Se69	Service_Cmpt	563159	female	spBar20	Cond_Cmpt	564135	male
Se_FF4_FrDn	FR_RH_Slide_Out	562477	male	spBar21	Cond_Cmpt	564135	male
Se_FF4_FrUp	FR_RH_Slide_Out	562477	male	Sw1.C258	Dash	561188	female
Se_FF4_RrDn	FR_RH_Slide_Out	562477	male	Sw1.C259	Dash	561186	male
Se_FF4_RrUp	FR_RH_Slide_Out	562477	male	Sw2	Dash	562763	male
Se_SO4_Fr	FR_RH_Slide_Out	562477	male	Sw3	Dash	562763	male
Se_SO4_Rr	FR_RH_Slide_Out	562477	male	Sw4	Dash	562763	male
SESO1	SlideOut_Panel	563159	male	Sw5	Dash	562763	male
SESO2_SESO3	SlideOut_Fr_LH	562479	female	Sw6	Dash	562763	male
SESO5_SESO6	RR_LH_Slide_Out	562479	female	Sw7A	Cond_Cmpt	562877	female
SESO7_SESO8	RR_RH_Slide_Out	562479	female	Sw7B.A	Cond_Cmpt	562485	male
shell1	FJB	562794	male	Sw7B.B	Cond_Cmpt	562486	female
shell2	RightHandConsole	561889	female	Sw11A	LH_Console	562763	male
shell3	RightHandConsole	561889	female	Sw14	Dash	562763	male
So7	ServiceCmpt.	561566	male	Sw16	Dash	562763	male
So8	Service_Cmpt	641385	male	Sw17	Dash	562763	male
So9	Engine_Cmpt	560016	female	Sw18A	Dash	562763	male
So11	Cond.Cmpt.	561566	female	Sw24	Dash	562763	male
So13	Evap_Cmpt	641385	male	Sw35	LH_Console	562763	male
So21	Front_Axle_Cmpt	564046	female	Sw38	LeftHandConsole	562763	male
So22	Front_Axle_Cmpt	564046	female	Sw39.A	RJB	562403	female
So23	Rear_Axle_Cmpt	564046	female	Sw39.B	RJB	562403	female
So24	Rear_Axle_Cmpt	564046	female	Sw40	LeftHandConsole	561690	male
So28	Pneumatic_Panel	641385	male	Sw41	LeftHandConsole	562749	male
So29	Pneumatic_Panel	641385	male	Sw44.A	FJB	562403	female
So30	Pneumatic_Panel	641385	male	Sw44.B	FJB	562403	female
So31	Pneumatic_Panel	641385	male	Sw45A.A	5nd_LH_Lugg_Door	562485	male
So32	Pneumatic_Panel	641385	male	Sw45A.B	5nd_LH_Lugg_Door	562486	female

CONNECTORS LIST

No	Location	Part #	Gender	No	Location	Part #	Gender
Sw46A.A	5nd_RH_Lugg_Door	562485	male	Sw107.K	LH_Console	561457	female
Sw46A.B	5nd_RH_Lugg_Door	562486	female	Sw108	LeftHandConsole	562763	male
Sw47A.A	3d_LH_Lugg_Door	562485	male	Sw116.A	4thLuggCmpt	560079	female
Sw47A.B	3d_LH_Lugg_Door	562486	female	Sw116.B	4thLuggCmpt	560079	female
Sw48A.A	3rd_RH_Lugg_Door	562485	male	Sw117.A	5thLuggCmpt.	560079	female
Sw48A.B	3rd_RH_Lugg_Door	562486	female	Sw117.B	5thLuggCmpt.	560079	female
Sw49A.A	2nd_LH_Lugg_Door	562485	male	Sw119	Dash	562763	male
Sw49A.B	2nd_LH_Lugg_Door	562486	female	Sw120	DriverArea	562237	female
Sw50A.A	2nd_RH_Lugg_Door	562485	male	Sw122	PassengerArea	562763	male
Sw50A.B	2nd_RH_Lugg_Door	562486	female	Sw128A.A	Evap_Cmpt	562485	male
Sw51A.A	1st_LH_Lugg_Door	562485	male	Sw128A.B	Evap_Cmpt	562486	female
Sw51A.B	1st_LH_Lugg_Door	562486	female	Sw137	Dash	562763	male
Sw52A.A	1st_RH_Lugg_Door	562485	male	Sw153	Dash	562763	male
Sw52A.B	1st_RH_Lugg_Door	562486	female	Sw160	Dash	562763	male
Sw58	EngineCmpt.	562581	male	Sw161	Dash	562763	male
Sw59	EngineCmpt.	562485	male	SwSo1	LHFrSlideOut	561552	female
Sw63A	LH_Console	562763	male	SwSo2	LHRrSlideOut	561552	female
Sw64.A	Service_Cmpt	560815	female	SwSo3	RHRrSlideOut	561552	female
Sw64.B	Service_Cmpt	560815	female	SwSo4	RHFrSlideOut	561552	female
Sw82.A	RJB	561457	female	Term16	RH_Console	560587	N/A
Sw82.B	RJB	561457	female	Term17	RH_Console	562228	N/A
Sw82.C	RJB	561457	female	Term18	RH_Console	560587	N/A
Sw82.D	RJB	561457	female	Term32	RH_Console	562228	N/A
Sw83.A	Dash	560082	female	Term149	Cond.Cmpt.	{part_no560105}	N/A
Sw83.B	Dash	560815	female	Term149A	Cond.Cmpt.	{part_no560105}	N/A
Sw83.C	Dash	560082	female	TermX00	RH_Console	562228	N/A
Sw83.D	Dash	560815	female	TermX01	RH_Console	562229	N/A
Sw85	LeftHandConsole	562749	male	TermX02	RH_Console	562229	N/A
Sw99	Dash	562763	male	TermX03	RH_Console	562229	N/A
Sw100	Dash	562763	male	TermX04	RH_Console	562228	N/A
Sw102	Dash	562763	male	TermX05	RH_Console	562229	N/A
Sw103A	LH_Console	562763	male	TermX06	RH_Console	562229	N/A
Sw104	Dash	562763	male	TermX07	RH_Console	562229	N/A
Sw106A	Entrance_Door	565908	male	TermX08	RH_Console	562229	N/A
Sw107.A	LH_Console	561457	female	TermX09	RH_Console	562229	N/A
Sw107.B	LH_Console	561457	female	VECF1	FJB	563186	male
Sw107.C	LH_Console	561457	female	VECF2	FJB	563183	male
Sw107.D	LH_Console	561457	female	VECF3	FJB	563185	male
Sw107.E	LH_Console	561457	female	VECF4	FJB	563182	male
Sw107.F	LH_Console	561457	female	VECF9	FJB	563448	male
Sw107.G	LH_Console	561457	female	VECF10	FJB	563181	male
Sw107.H	LH_Console	561457	female	VECF11	FJB	563184	male
Sw107.J	LH_Console	561457	female	VECF12	FJB	563187	male

CONNECTORS LIST

No	Location	Part #	Gender				
Vecr1	RJB	563186	male				
Vecr2	RJB	563183	male				
Vecr3	RJB	563185	male				
VECR4	RJB	563182	male				
Vecr9	RJB	563448	male				
Vecr10	RJB	563181	male				
VECR11	RJB	563184	male				
VECR12	RJB	563187	male				
Y80	Engiene_Cmpt	563789	male				
Y81	Cond_Cmpt	563793	male				

DIODES LIST

No	Location	Part #	Function	Page					
D1	FJB	561740	AccessoriesDiode	3.2					
D2	FJB	561740	DiodeDriverLiq.Sol.	18.1					
D3	UpperFrontCap	561740	SuppressorDiodeUpperWiper	34.1					
D4	RHConsole	561740	SuppressorDiodeLowerWiper2ndSpd	34.1					
D5	RHConsole	561740	SuppressorDiodeLowerWiper1stSpd	34.1					
D6	RJB	561740	SuppressorDiodeMasterrelay	3.1					
D7	RJB	561740	*opt*	25.1					
D11	Evap.Cmpt.	561740	DiodePass.Liq.Sol	18.2					
D15	RJB	561740	WakeUpDiode	3.2					
D24	Evap_Cmpt_	561740	Condensor_Fan	18.2					
D25	Evap.Cmpt.	561740	SuppressorDiodeEvaporatorFan	18.2					
D29	RJB	561740	SuppressorDiodeUnloaderRH	18.2					
D30	Evap.Cmpt.	561740	SuppressorDiodeWaterPump	18.2					
D31	RJB	561740	SuppressorDiodeA/CClutch	18.2					
D36	RJB	561740	SuppressorDiodeRadiatorFanClutch2ndSpd	13.1					
D37	RJB	561740	SuppressorDiodeRadiatorFanClutch1stSpd	13.1					
D44	FJB	561740	IgnitionDiode	3.2					
D50	ServiceCmpt.	561740	Cyclop	32.1					
D51	RJB	561740	Cyclop	32.1					
D52	RJB	561740	Cyclop	26.2					
D53	RJB	561740	Cyclop	26.2					
D62	RJB	561740	MasterRelay	3.2					
D66	ServiceCmpt.	561740	SuppressorDiodeWaterPump	18.3					
D73	Dash	561740	EntranceDoorHingeSwitch	29.1					
D75	Slide-OutPanel	561740	ParkBrakeDiode	20.1					
D79	ServiceCmpt.	561740	Level_low	32.1					
D81	Dash	561740	Entrancedoor	29.1					
D82	Dash	561740	Entrancedoor	29.1					
D71A	Entrance_door	563374	Entrance_door_lock	29.1					
D72A	Entrance_door	563374	Entrance_door_lock	29.1					
DSo1	Luggagescmpt	563375	ZenerMotSldOut1	20.1					
DSo2	Luggagescmpt	563375	ZenerMotSldOut1	20.1					
DSo3	Luggagescmpt	563375	ZenerMotSldOut2	20.1					
DSo4	Luggagescmpt	563375	ZenerMotSldOut2	20.1					
DSo5	Luggagescmpt	563375	ZenerMotSldOut3	20.2					
DSo6	Luggagescmpt	563375	ZenerMotSldOut3	20.2					
DSo7	Luggagescmpt	563375	ZenerMotSldOut4	20.2					
DSo8	Luggagescmpt	563375	ZenerMotSldOut4	20.2					

RESISTORS LIST

No	Location	Part #	Function	Page					
Res3	RJB	563593	CANNetwork	6.1					
Res4	Dash	563593	CANNetwork	6.1					
Res6	RJB	563593	*opt*	6.2					
Res7	RJB	563593	J1939	6.2					
Res9	Dash	564164	Dash_back_light	19.1					
Res15	EngineCmpt.	563587	ENDOFLINEDEVICE	40.1					
Res31	Evap.Cmpt.	N/A	Urea_Hose_Heater	14.3					
Res32	Evap.Cmpt.	N/A	Urea_Hose_Heater	14.3					
Res33	FJB	561534	Cluster	10.1					
Res34	FJB	561534	Cluster	10.1					
Res35	FJB	561534	Cluster	10.1					
Res36	FJB	561534	Cluster	10.1					
Res37	ServiceCmpt.	565894	Resistor25R	39.1					
Res50	RJB	563006	Cyclop	26.2					
Res51	RJB	563006	Cyclop	26.2					
Res53	FJB	563593	*opt*	6.2					

RELAYS LIST

No	Location	Part #	Function	Page					
R1	RJB	562364	MasterRelay	3.1					
R3	RJB	563348	12vIgn&AccRelay	3.1					
R10	Evap.Cmpt.	563348	CondensorPowerRelay	18.2					
R11	RJBVECR	563332	Ignition_Relay	5.1					
R12	Evap.Cmpt.	563348	EvaporatorRelay	18.2					
R17	RJB	564218	12vRrWUpRelay	3.3					
R18	FJB	564218	24vFrWUpRelay	3.3					
R19	FJB	564218	12vFrWUpRelay	3.3					
R21	RJB	563269	EmergencyCutoutRelay	3.2					
R22	FJB	563269	VECU_Relay	3.3					
R23	RHConsole	563332	LowerWiperRelay	34.1					
R24	FJB	563332	UpperWiperRelay	34.1					
R25	RJBVECR	563332	EcmIgn	5.1					
R29	RJB	563348	Preheater_Volvo	14.2					
R30	RJB	563332	LuggagesDoorsLocksRelay	33.1					
R31	RJB	563332	LuggagesDoorsLocksRelay	33.1					
R32	RJB	563332	LuggagesDoorsLocksRelay	33.1					
R33	RJB	563332	LuggagesDoorsLocksRelay	33.1					
R34	RJB	564218	12v_Rr_Engine_Ecu	3.3					
R36	Right_Hand_Console	563332	Entrance_Door	29.1					
R37	Right_Hand_Console	563332	Entrance_Door	29.1					
R41	FJB	563332	SunVisor_Relay	38.1					
R42	FJB	563332	SunVisor_Relay	38.1					
R43	FJB	563332	SunVisor_Relay	38.1					
R_Starter	RJB	564095	Starter	3.2					
RSo1	LuggagesCmpt	563445	RlyCloseSlide-Out1	20.1					
RSo2	LuggagesCmpt	563445	RlyOpenSlide-Out1	20.1					
RSo3	LuggagesCmpt	563445	RlyCloseSlide-Out2	20.1					
RSo4	LuggagesCmpt	563445	RlyOpenSlide-Out2	20.1					
RSo5	Luggagescmpt	563445	RlyCloseSlide-Out3	20.2					
RSo6	Luggagescmpt	563445	RlyOpenSlide-Out3	20.2					
RSo7	Luggagescmpt	563445	RlyOpenSlide-Out	20.2					
RSo8	Luggagescmpt	563445	RlyOpenSlide-Out	20.2					

FUSES LIST

No	Location	Part #	Function	Rating	Page
F100	FuseBoxRJB	563283	*opt*	10amp	5.1
F104	FuseBoxFJB	563284	Spare	15amp	4.1
F105	FuseBoxFJB	563282	Spare	20amp	4.1
F106	RJB	562597	Pre_Heater	150A	14.2
F122	RJB	562606	*opt*	25amp	13.1

BATTERIES

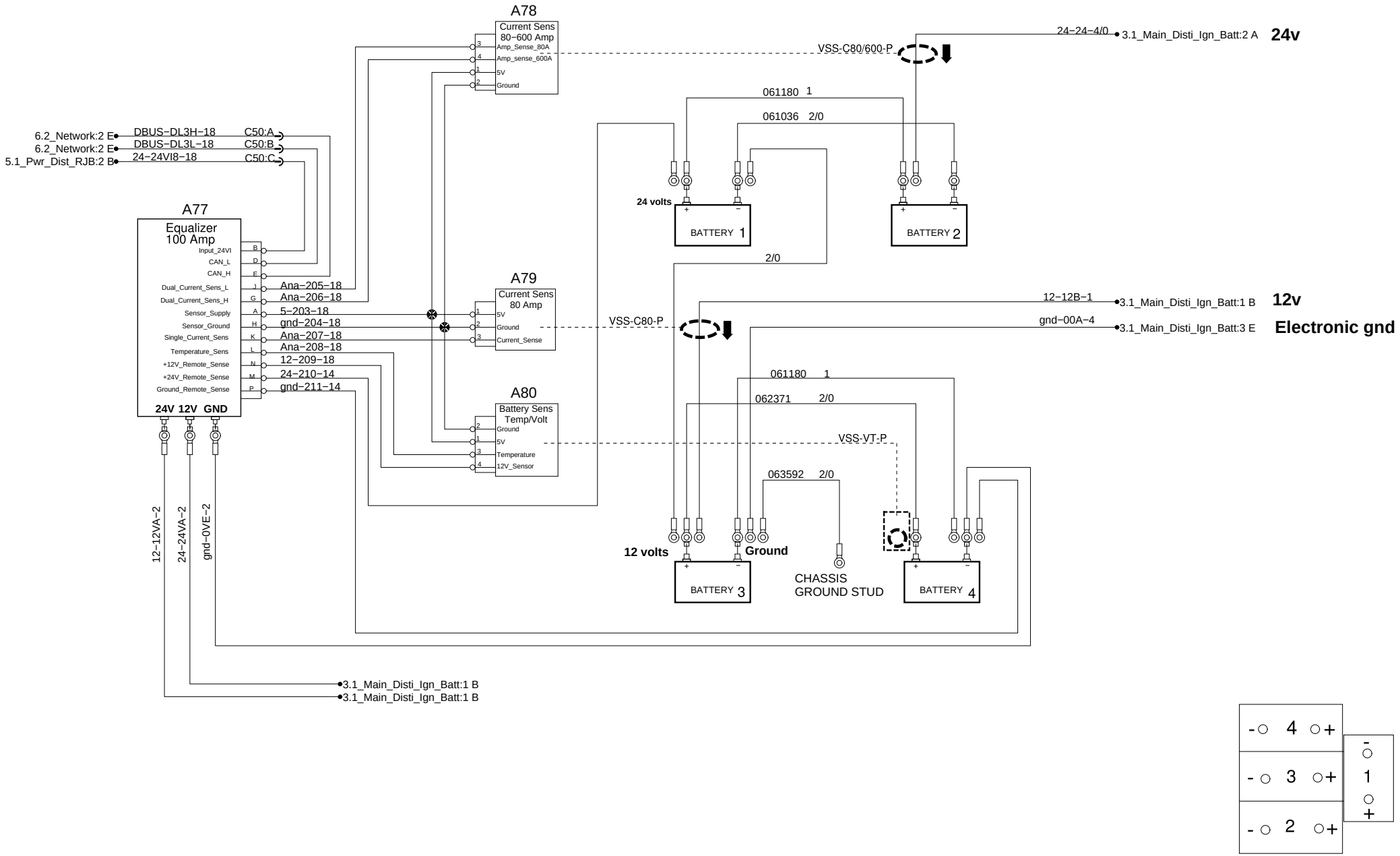

PREVOST®	WIRING DIAGRAM	No:D061360	Page:1.1 Rev:0

Ground Distribution

FJB gnd electronic stud

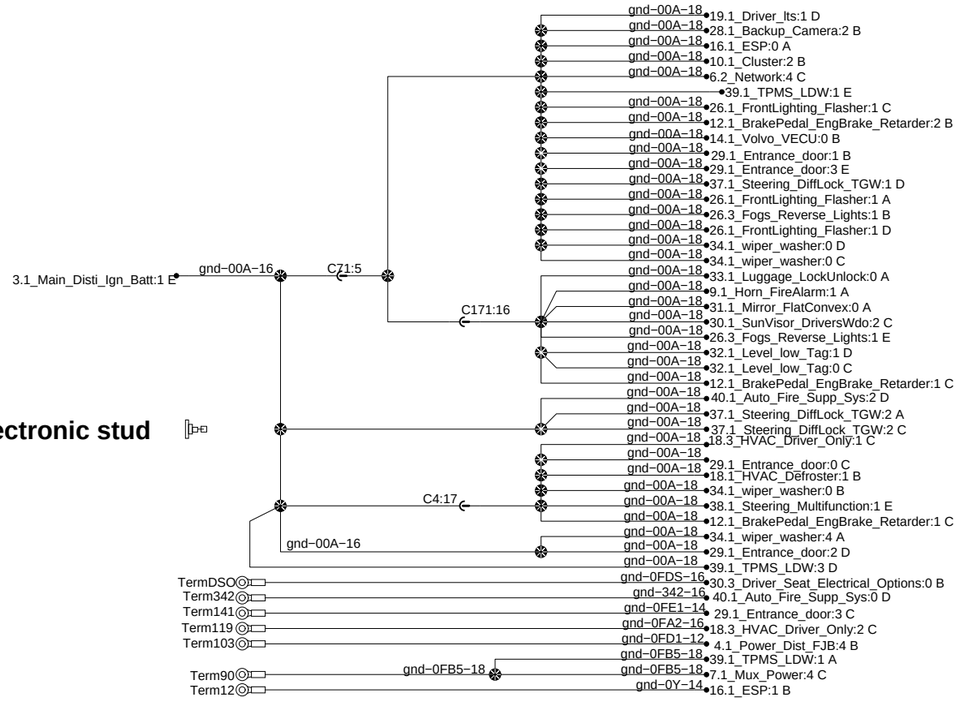

Electronic gnd to Dash harness

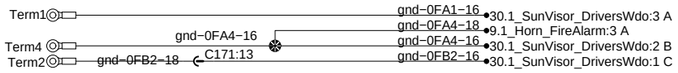

Front gnd stud

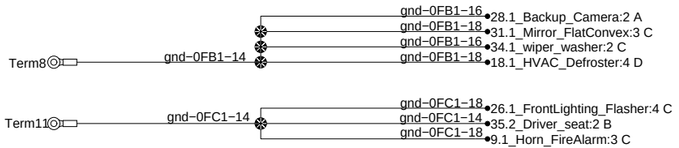

Front Top gnd stud

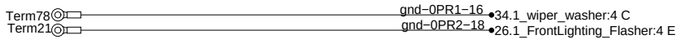

RH Console gnd stud

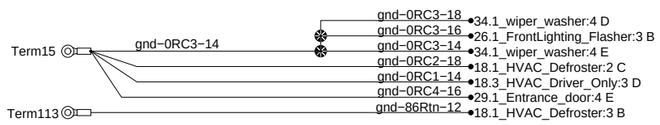

Evaporator cmpt gnd stud

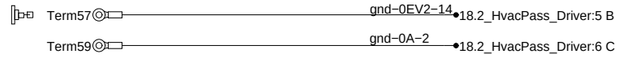

Condensor cmpt gnd stud

Engine compt electronic gnd

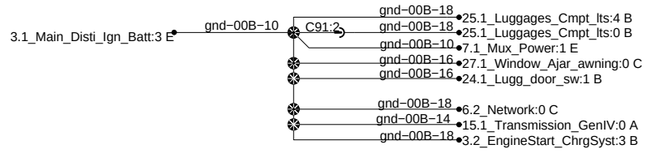

RJB gnd stud

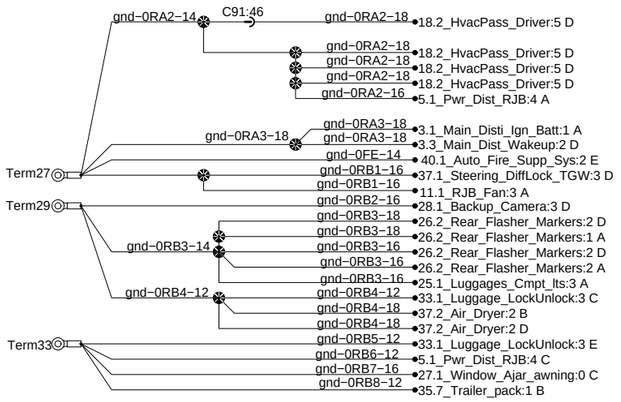

Eng. cmpt gnd stud

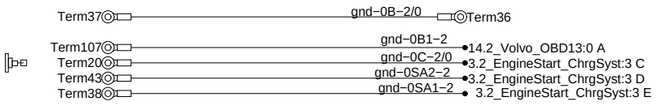

SLIDE OUT chassis gnd

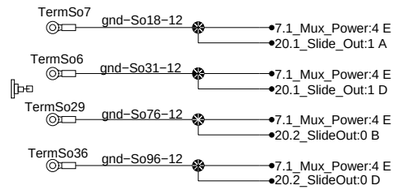

Rev:0

Page:2.1

No:D061360

WIRING DIAGRAM

PREVOST®

Ground Distribution

FJB gnd electronic stud

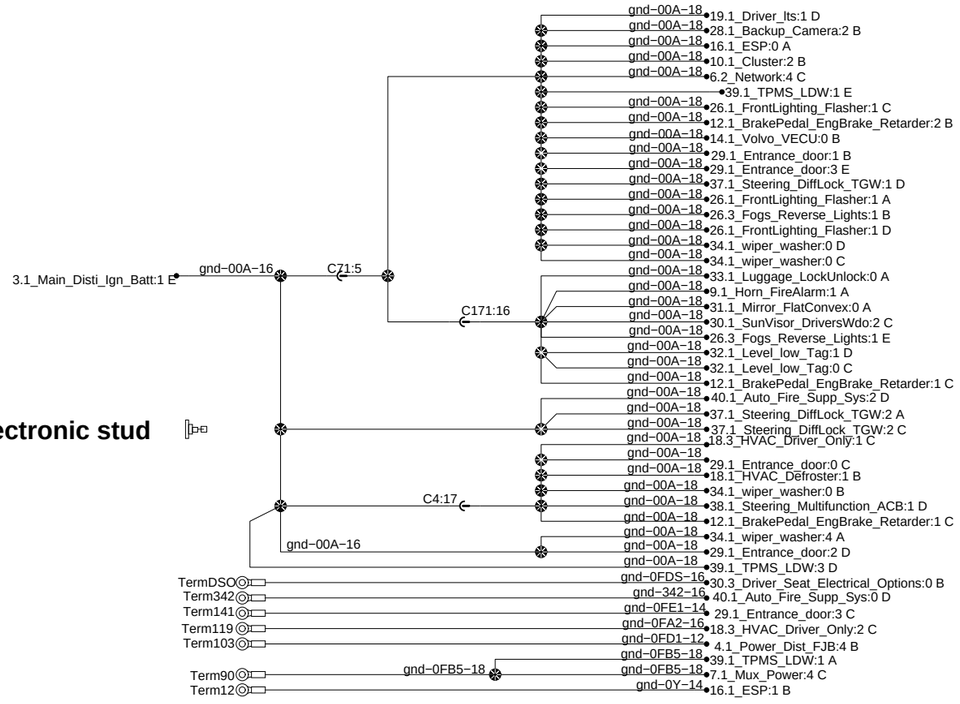

Electronic gnd to Dash harness

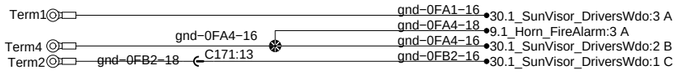

Front gnd stud

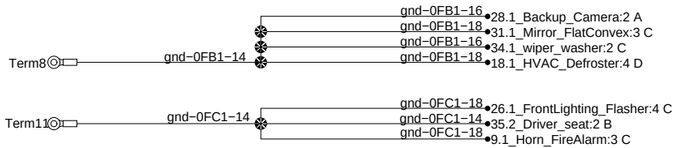

Front Top gnd stud

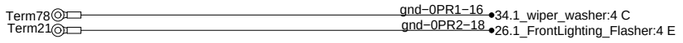

RH Console gnd stud

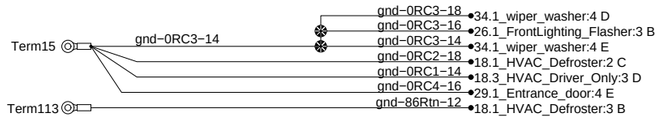

Evaporator cmpt gnd stud

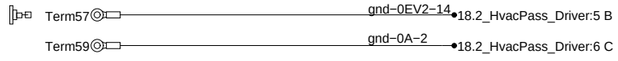

Condensor cmpt gnd stud

Engine compt electronic gnd

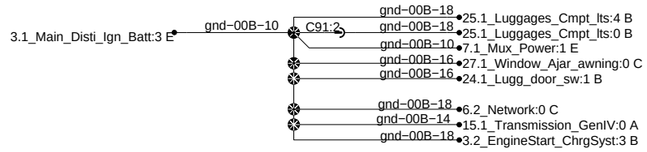

RJB gnd stud

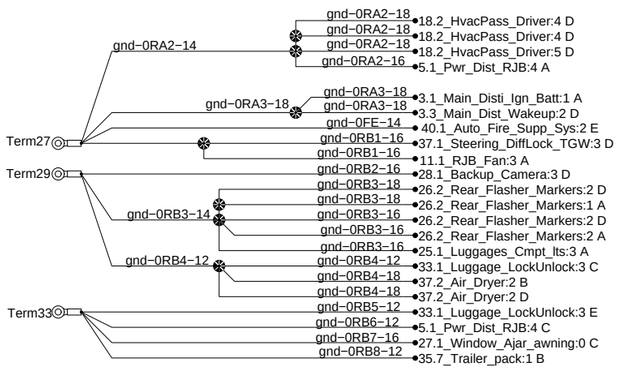

Eng. cmpt gnd stud

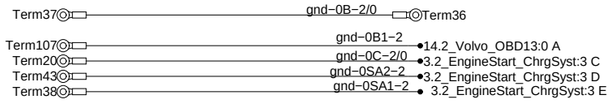

SLIDE OUT chassis gnd

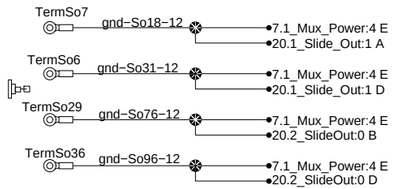

Rev:3
Page:2.1
No:D061360
WIRING DIAGRAM
PREVOST©

Ground Distribution

FJB gnd electronic stud

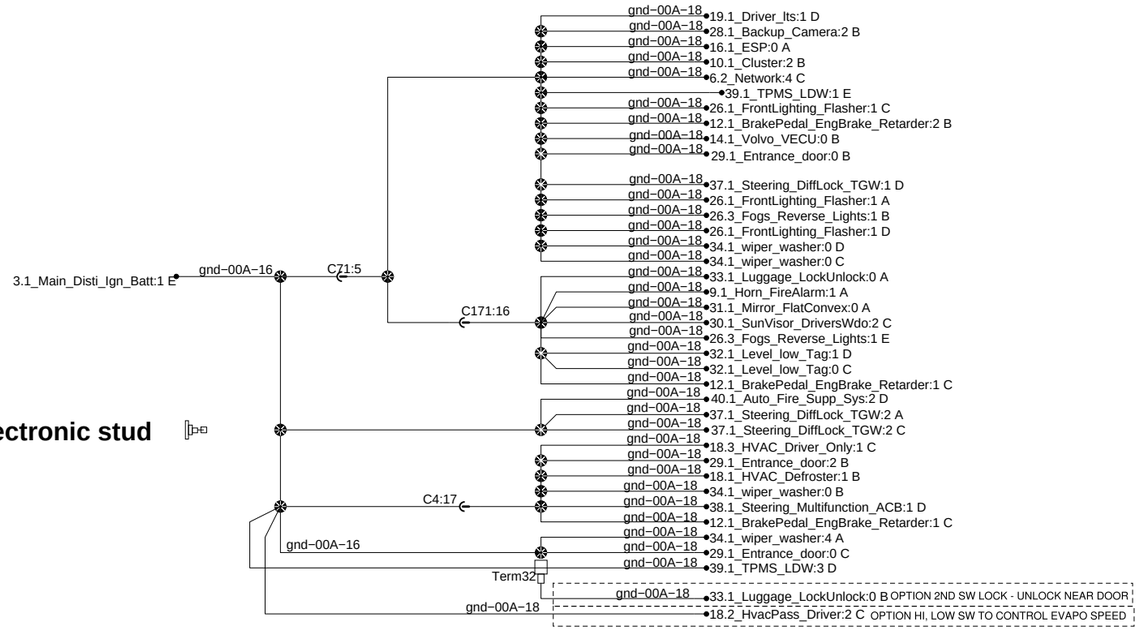

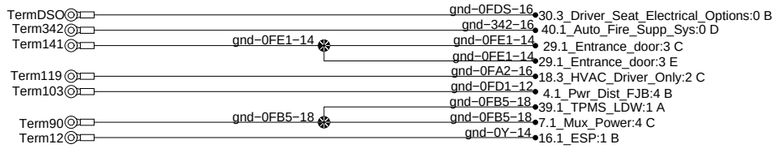

Electronic gnd to Dash harness

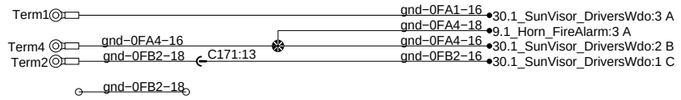

Front gnd stud

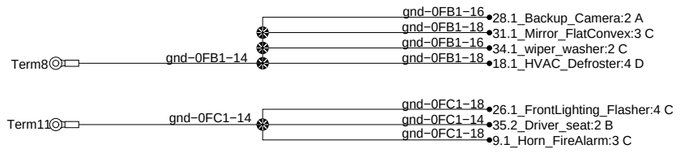

Front Top gnd stud

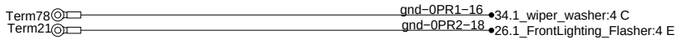

RH Console gnd stud

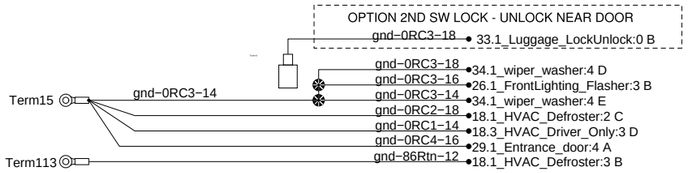

Evaporator cmpt gnd stud

Condensor cmpt gnd stud

Engine compt electronic gnd

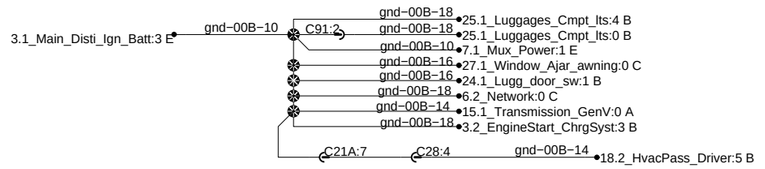

RJB gnd stud

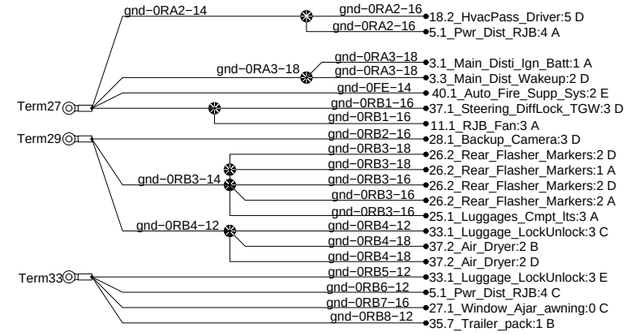

Eng. cmpt gnd stud

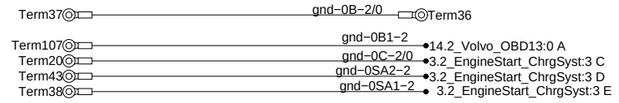

SLIDE OUT chassis gnd

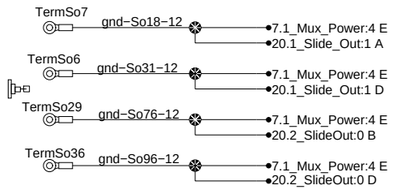

Rev: 09

Page:2.1

No:D061360

WIRING DIAGRAM

PREVOST

Ground Distribution

FJB gnd electronic stud

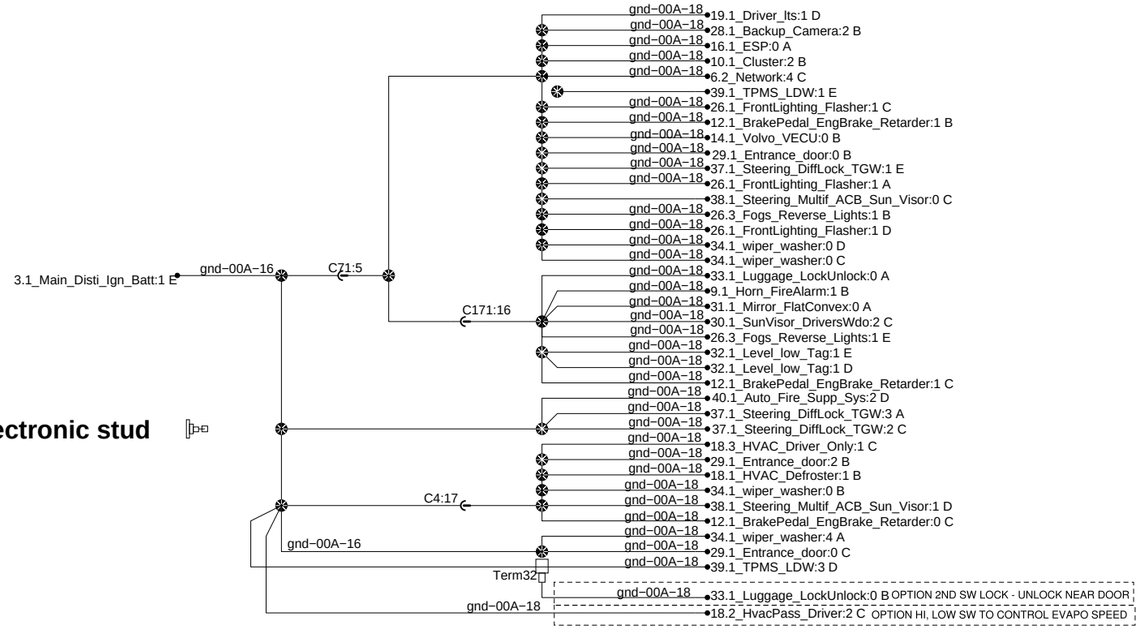

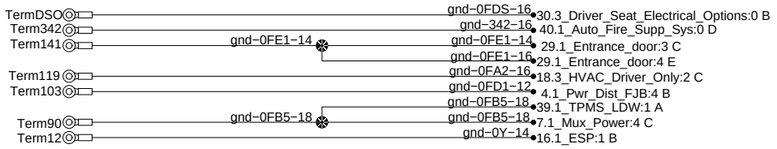

Electronic gnd to Dash harness

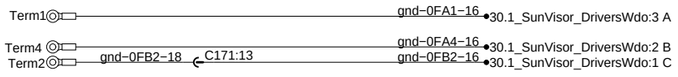

Front gnd stud

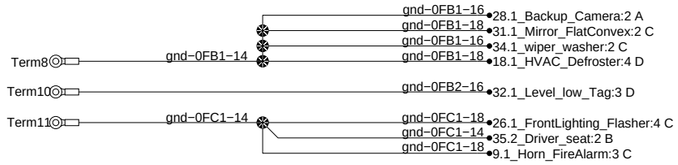

Front Top gnd stud

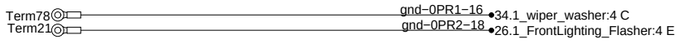

RH Console gnd stud

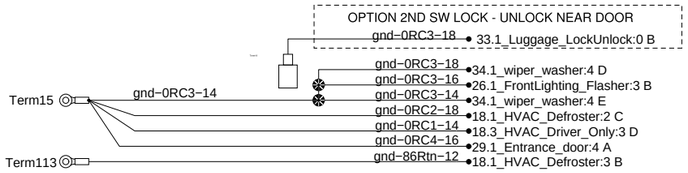

Evaporator cmpt gnd stud

Condensor cmpt gnd stud

Engine compt electronic gnd

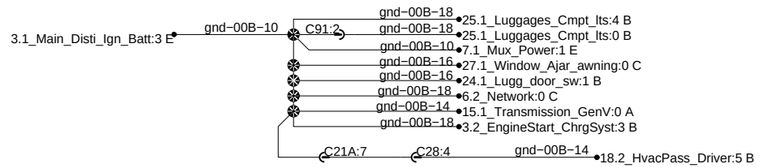

RJB gnd stud

Eng. cmpt gnd stud

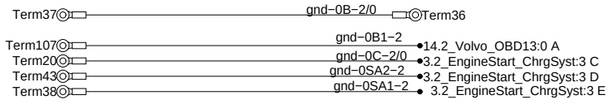

SLIDE OUT chassis gnd

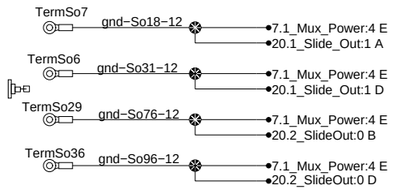

Rev:10

Page:2.1

No:D061360

WIRING DIAGRAM

PREVOST

Ground Distribution

FJB gnd electronic stud

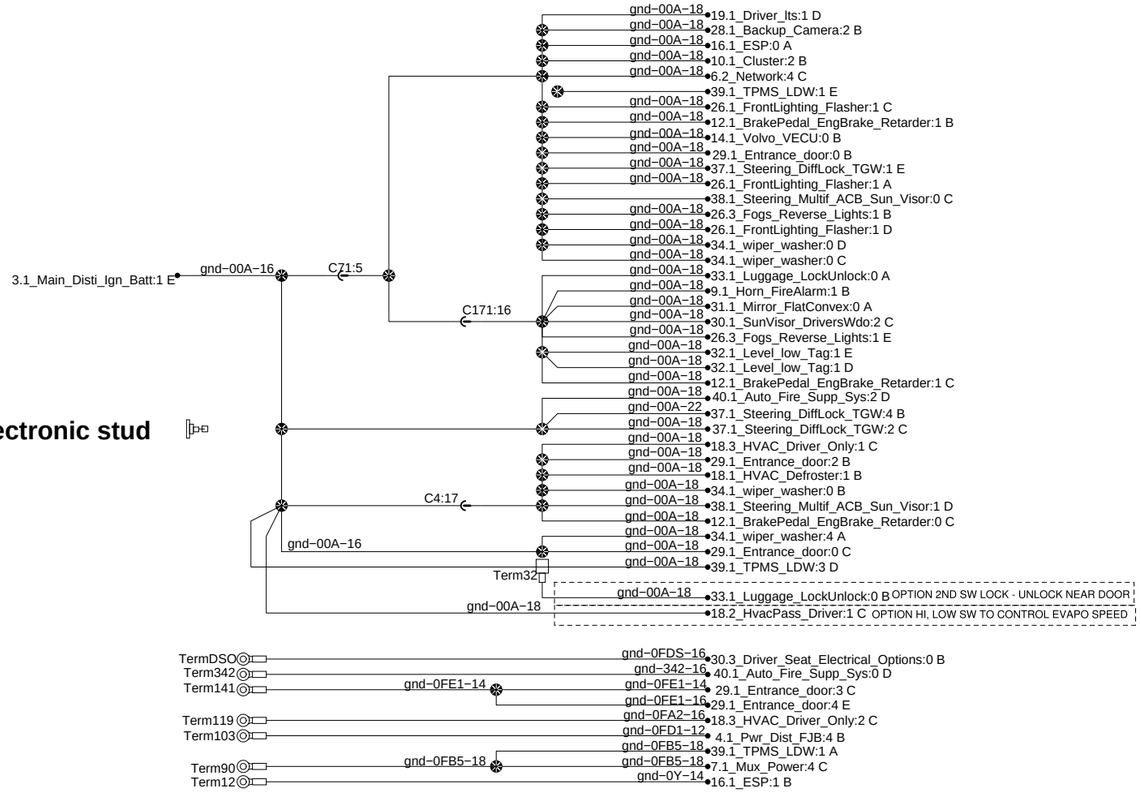

Electronic gnd to Dash harness

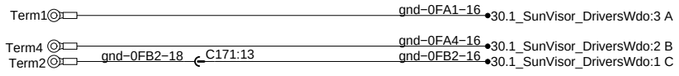

Front gnd stud

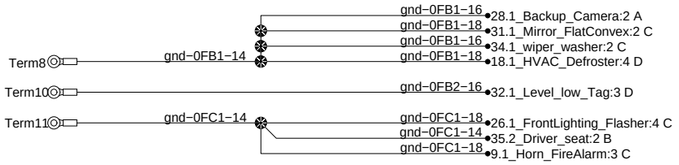

Front Top gnd stud

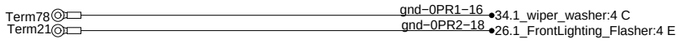

RH Console gnd stud

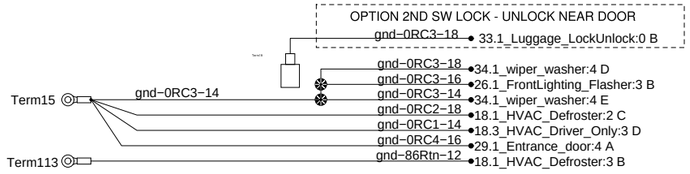

Evaporator cmpt gnd stud

Condensor cmpt gnd stud

Engine compt electronic gnd

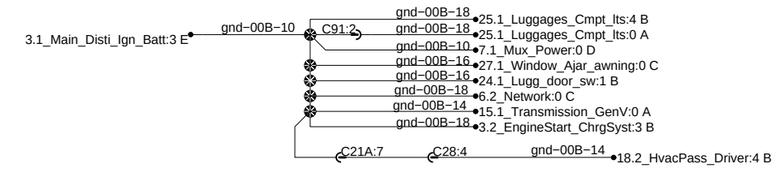

RJB gnd stud

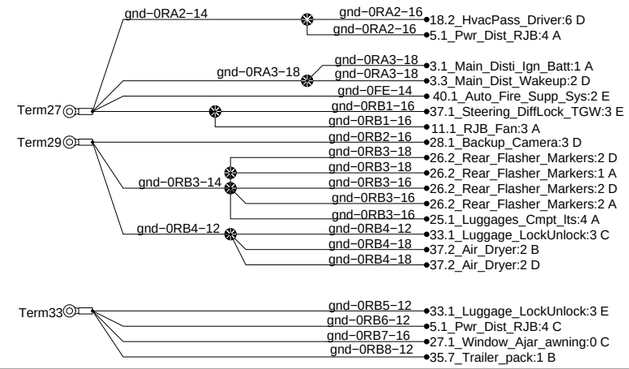

Eng. cmpt gnd stud

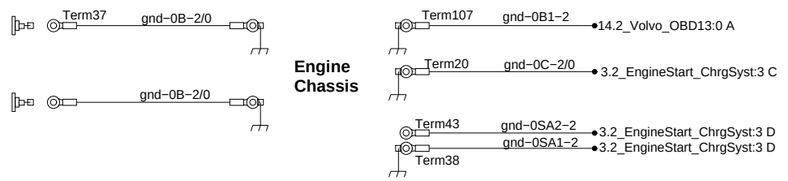

Slide−Out Electrical Cmpt. Chassis Gnd

Rev:16 | Page:2.1 | No:D061360 | WIRING DIAGRAM | PREVOST

Ground Distribution

FJB gnd electronic stud

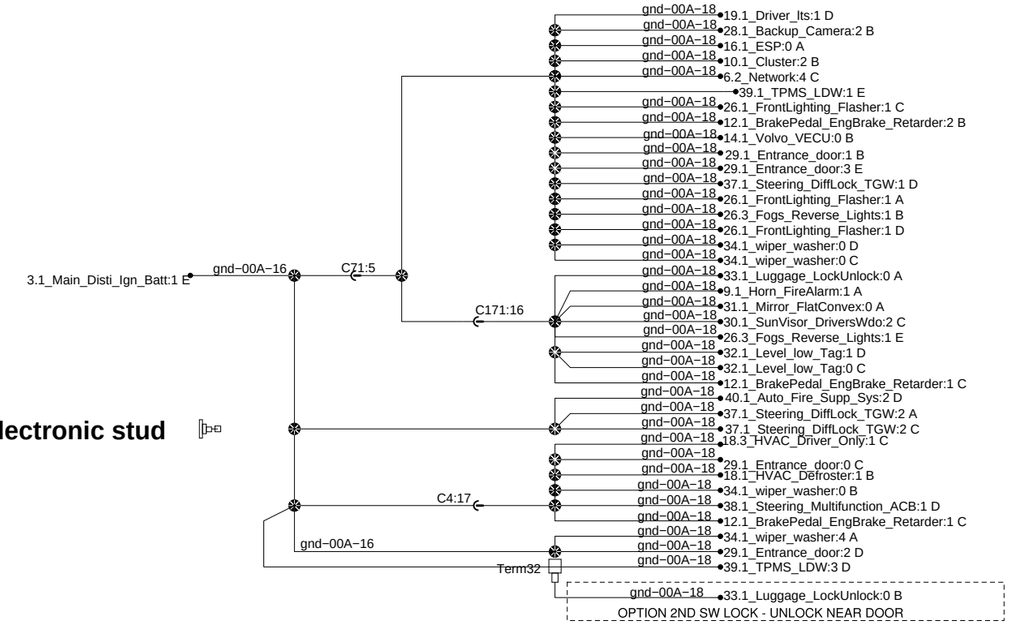

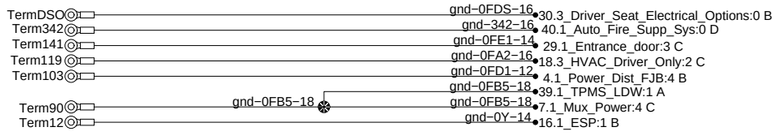

Electronic gnd to Dash harness

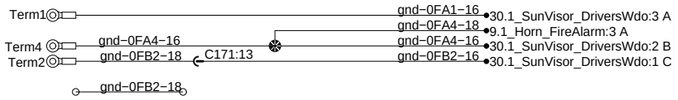

Front gnd stud

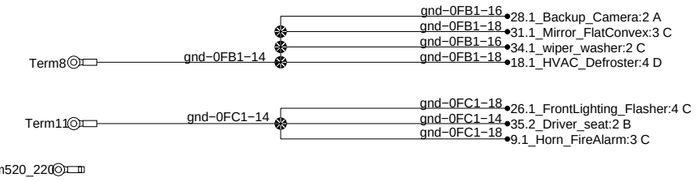

Front Top gnd stud

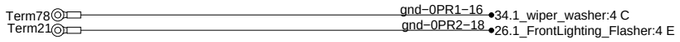

RH Console gnd stud

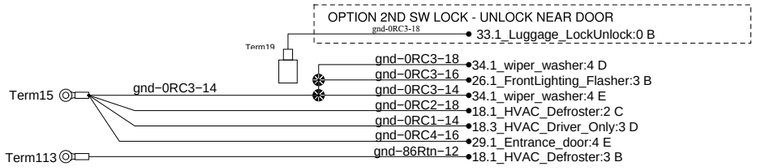

Evaporator cmpt gnd stud

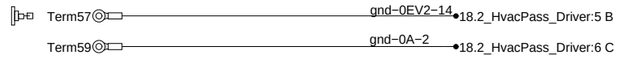

Condensor cmpt gnd stud

Engine compt electronic gnd

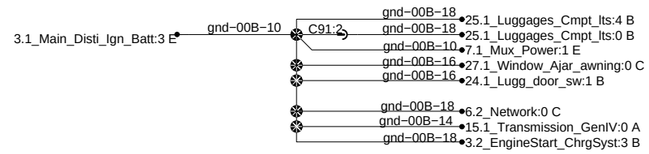

RJB gnd stud

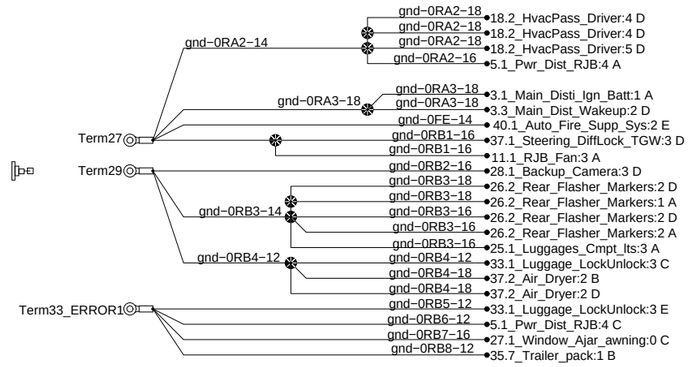

Eng. cmpt gnd stud

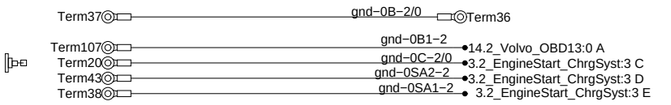

SLIDE OUT chassis gnd

Rev:00

Page:2.1SP1

No:D061360

WIRING DIAGRAM

PREVOST®

MAIN DISTRIBUTION Batteries & Ignition

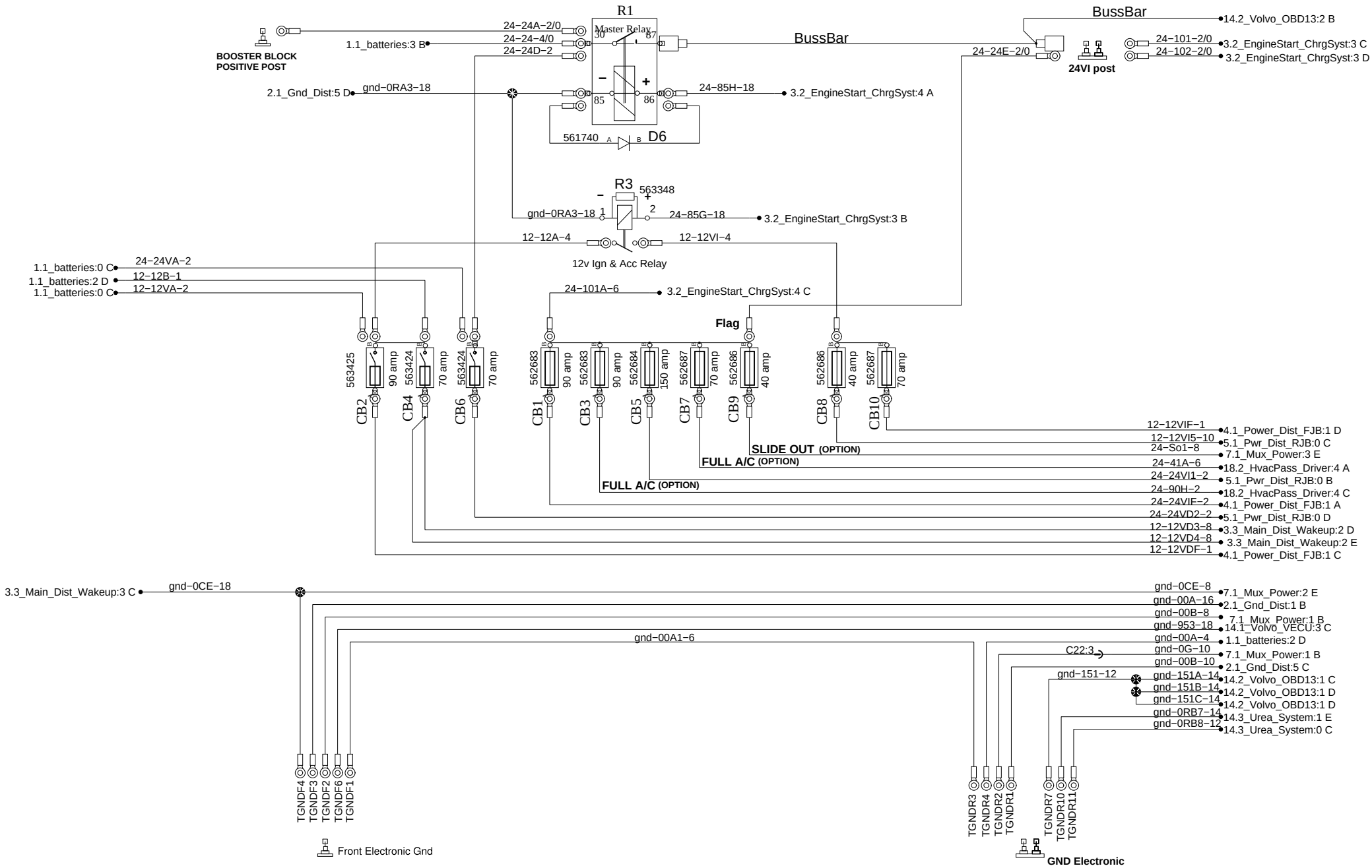

MAIN DISTRIBUTION Batteries & Ignition

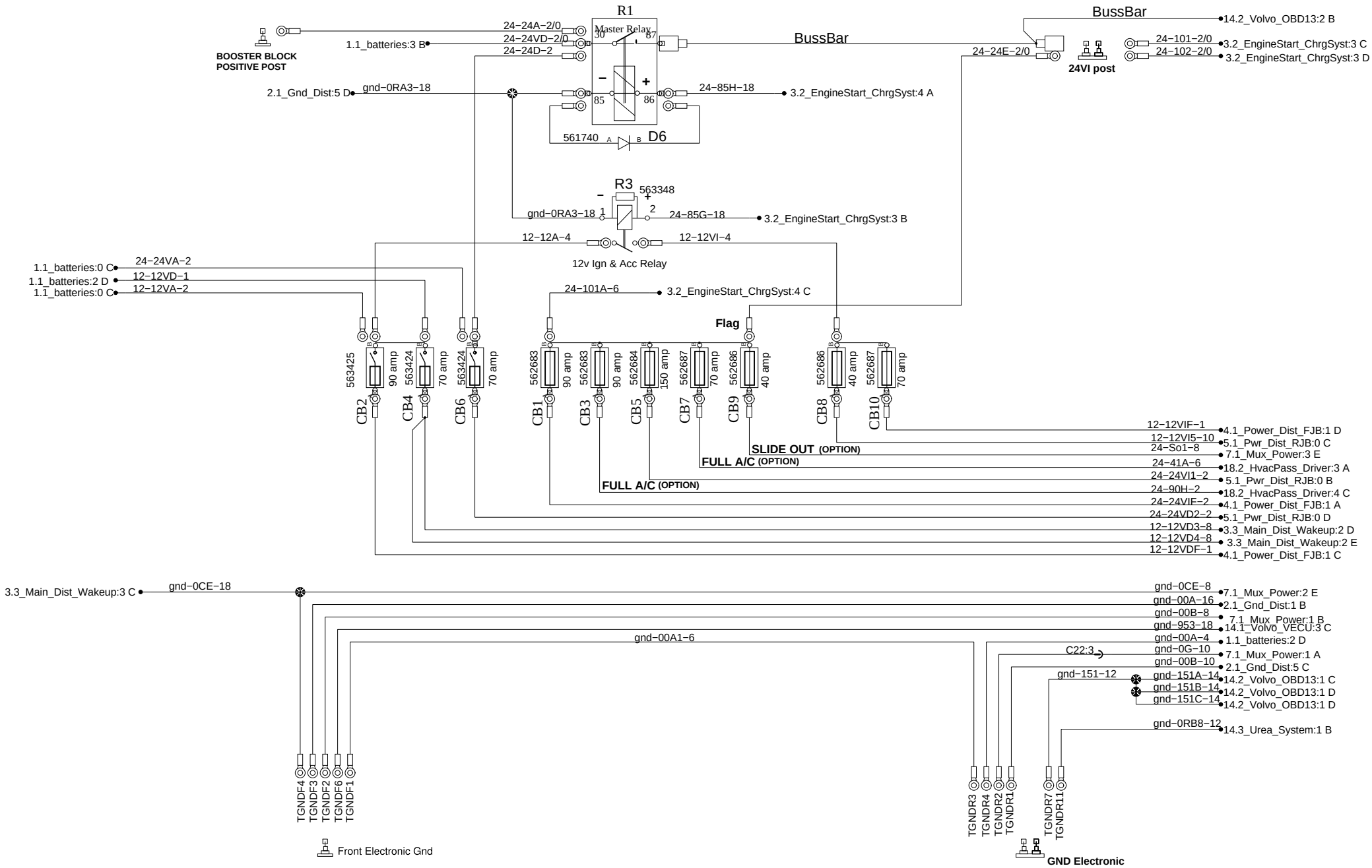

PREVOST®	WIRING DIAGRAM	No:D061360	Page:3.1	Rev:3

MAIN DISTRIBUTION Batteries & Ignition

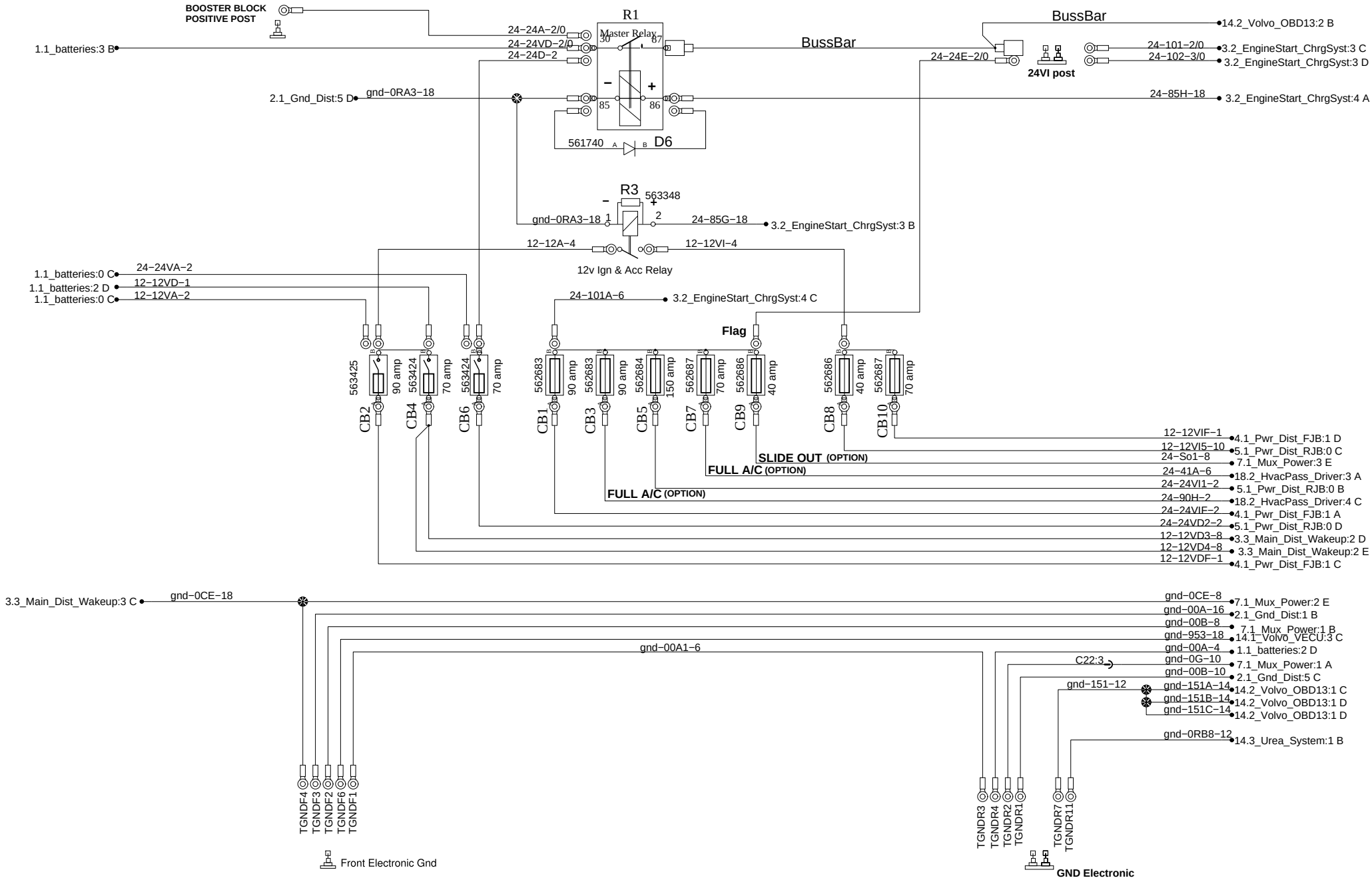

PREVOST®	WIRING DIAGRAM	No:D061360	Page:3.1	Rev:12

MAIN DISTRIBUTION Batteries & Ignition

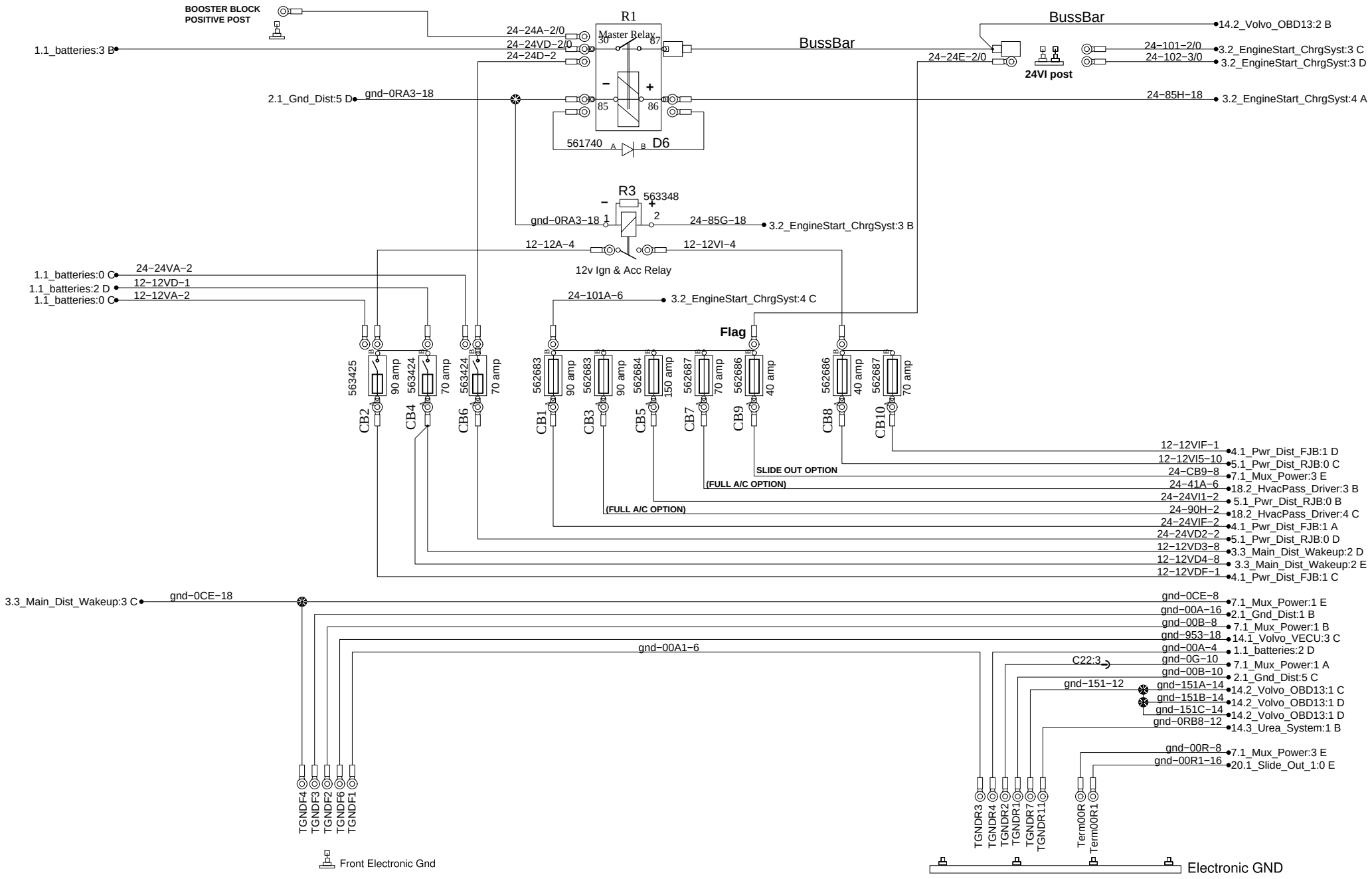

FRONT JUNCTION BOX

REAR JUNCTION BOX

PREVOST®	WIRING DIAGRAM	No:D061360	Page:3.1	Rev:16

Engine Start and Charging system

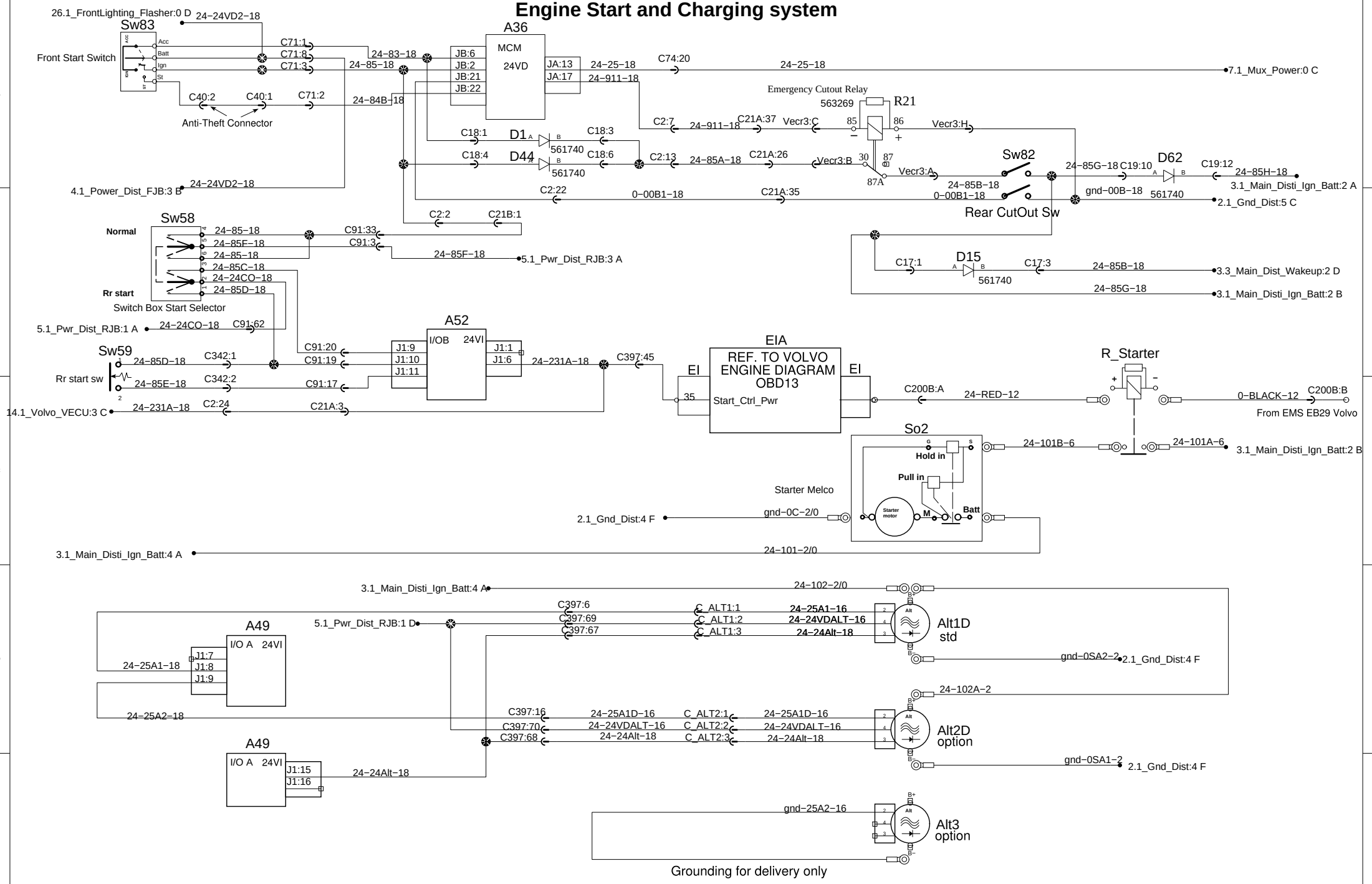

Engine Start and Charging system

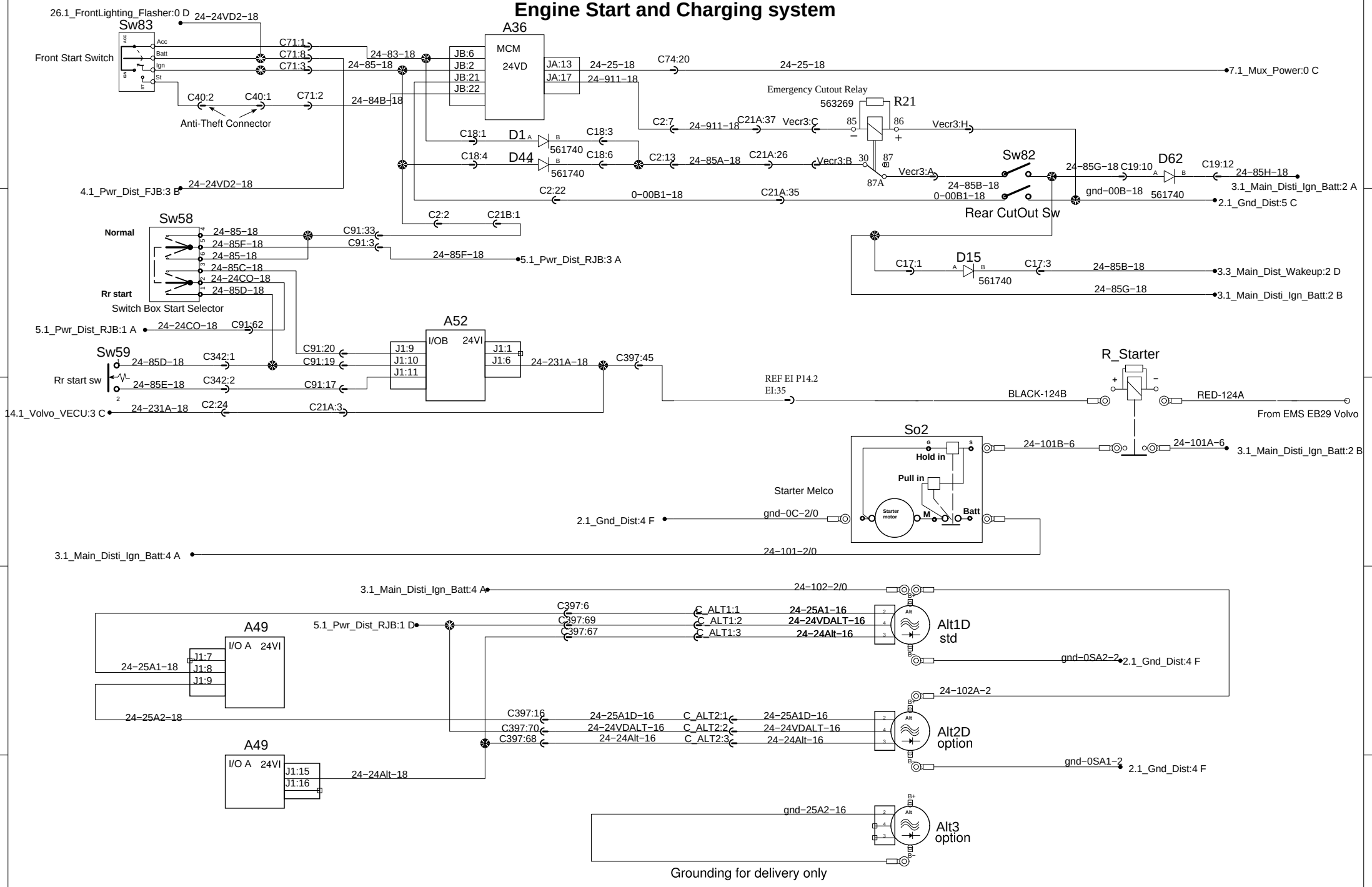

Engine Start and Charging system

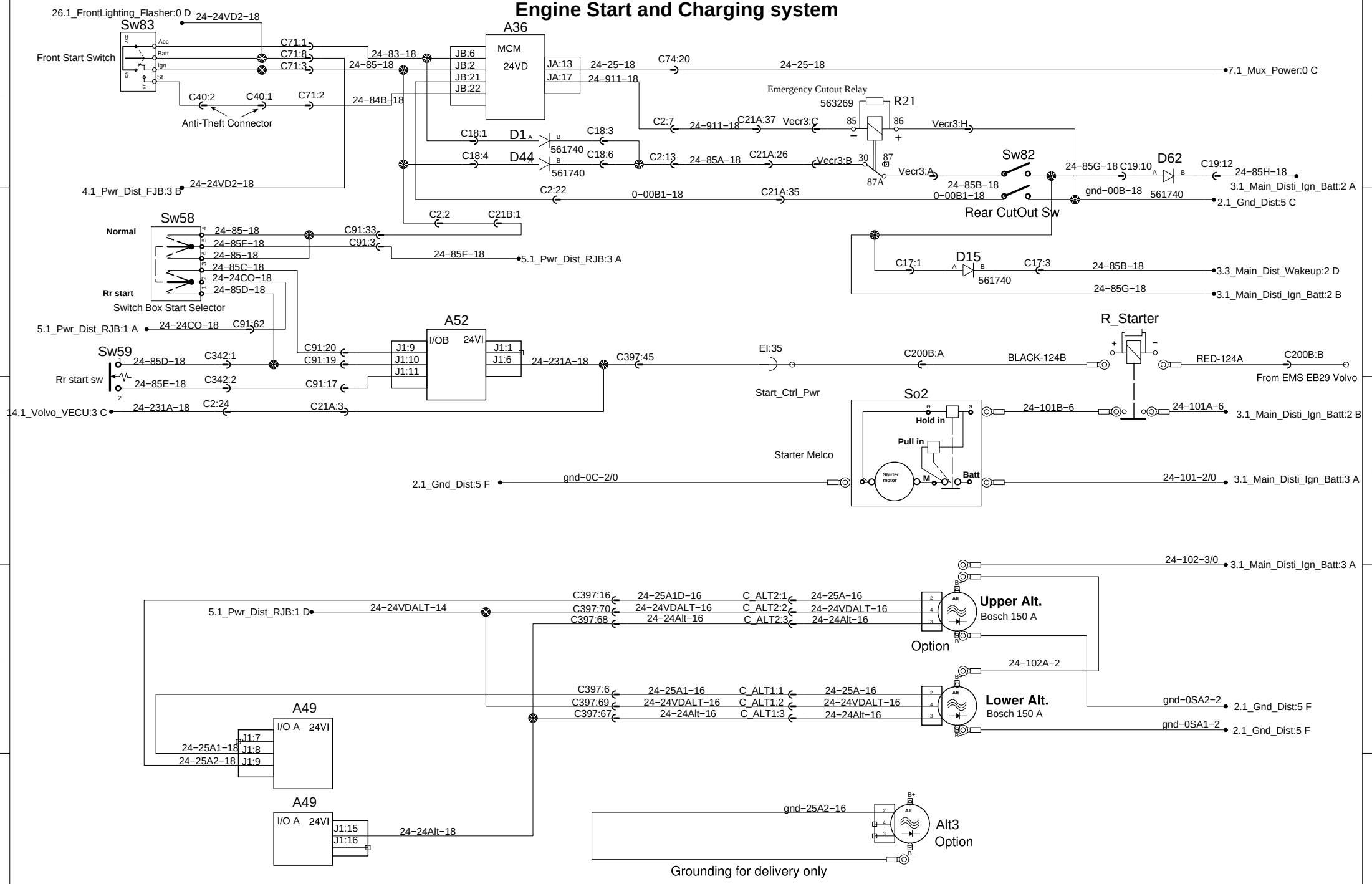

Engine Start and Charging system

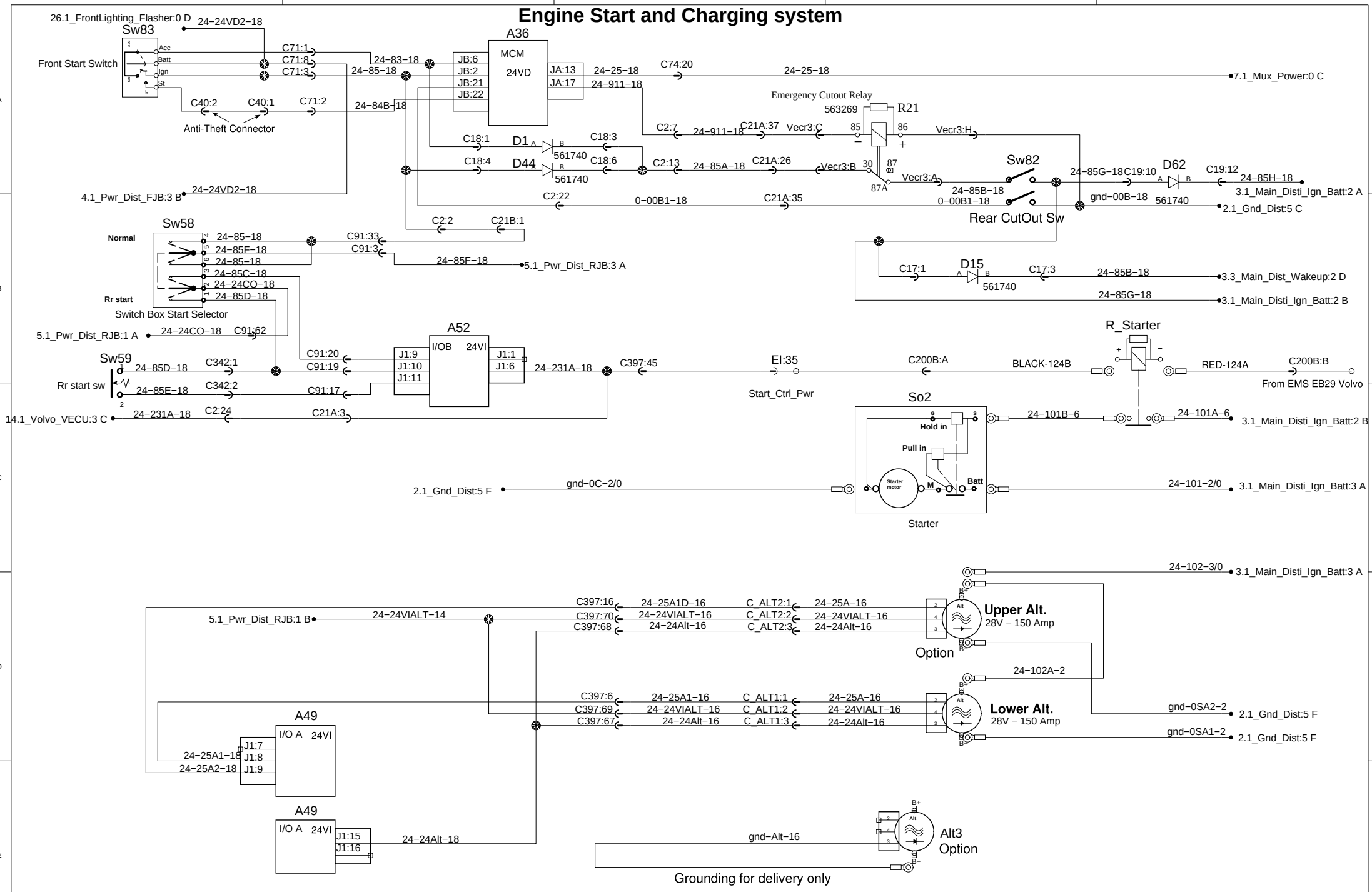

Engine Start and Charging system

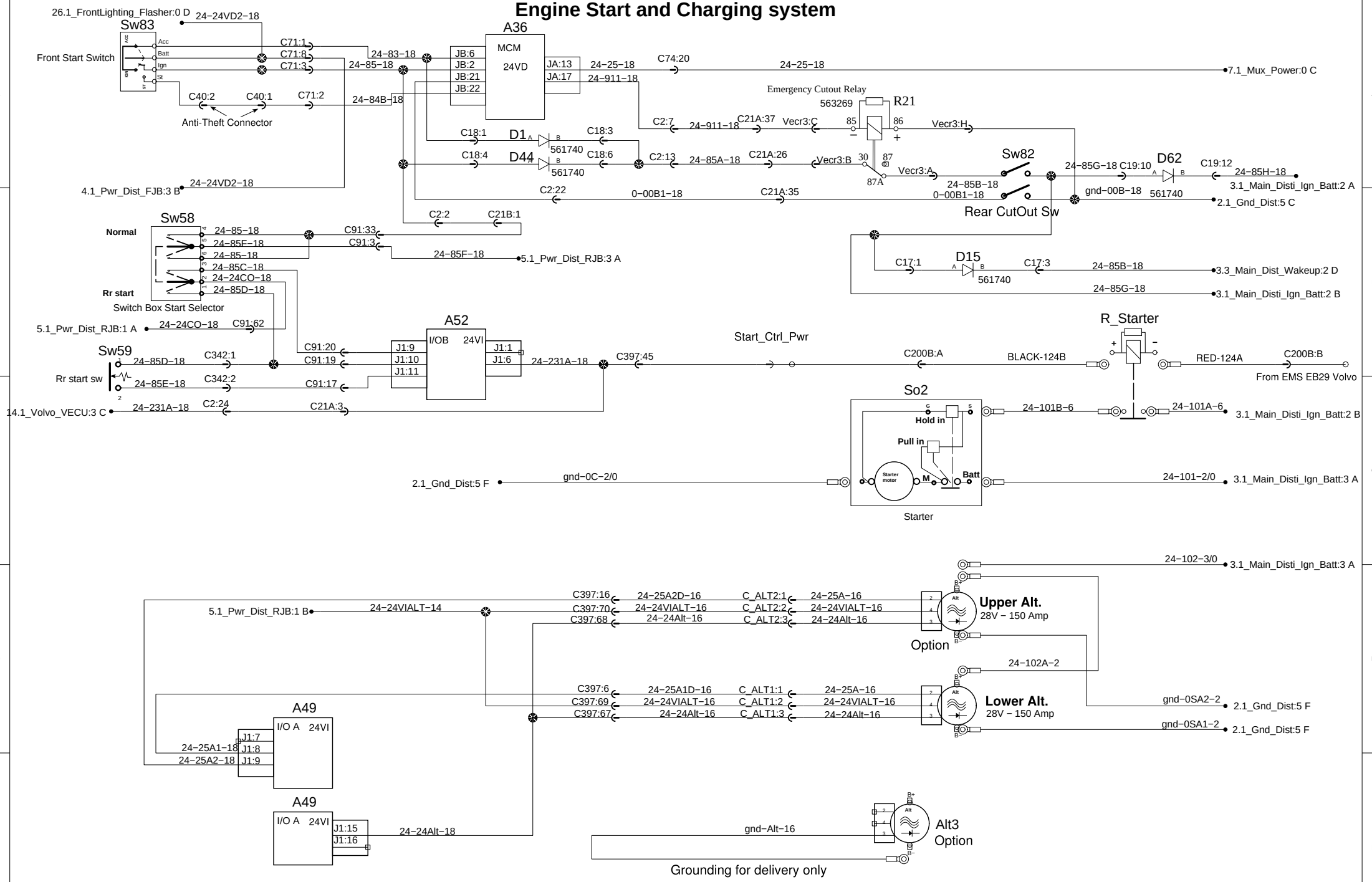

MAIN DISTRIBUTION Wake−Up

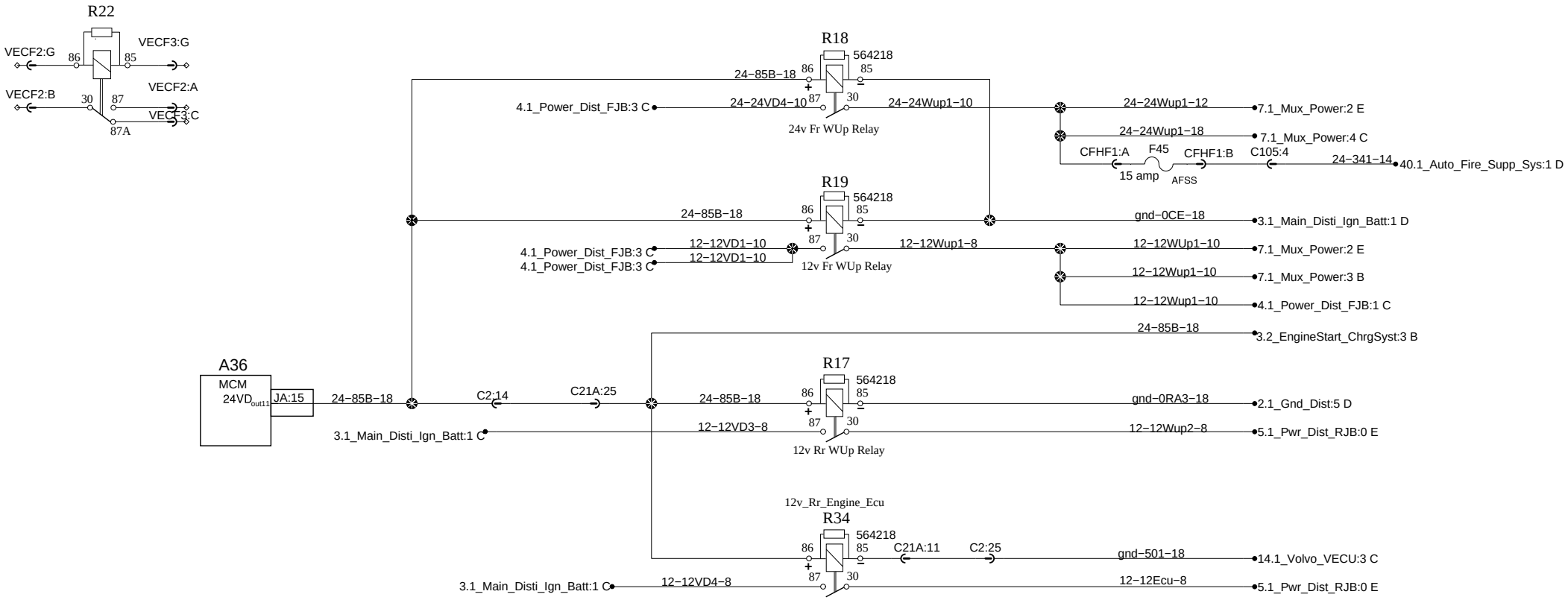

Power Distribution Front Junction Box

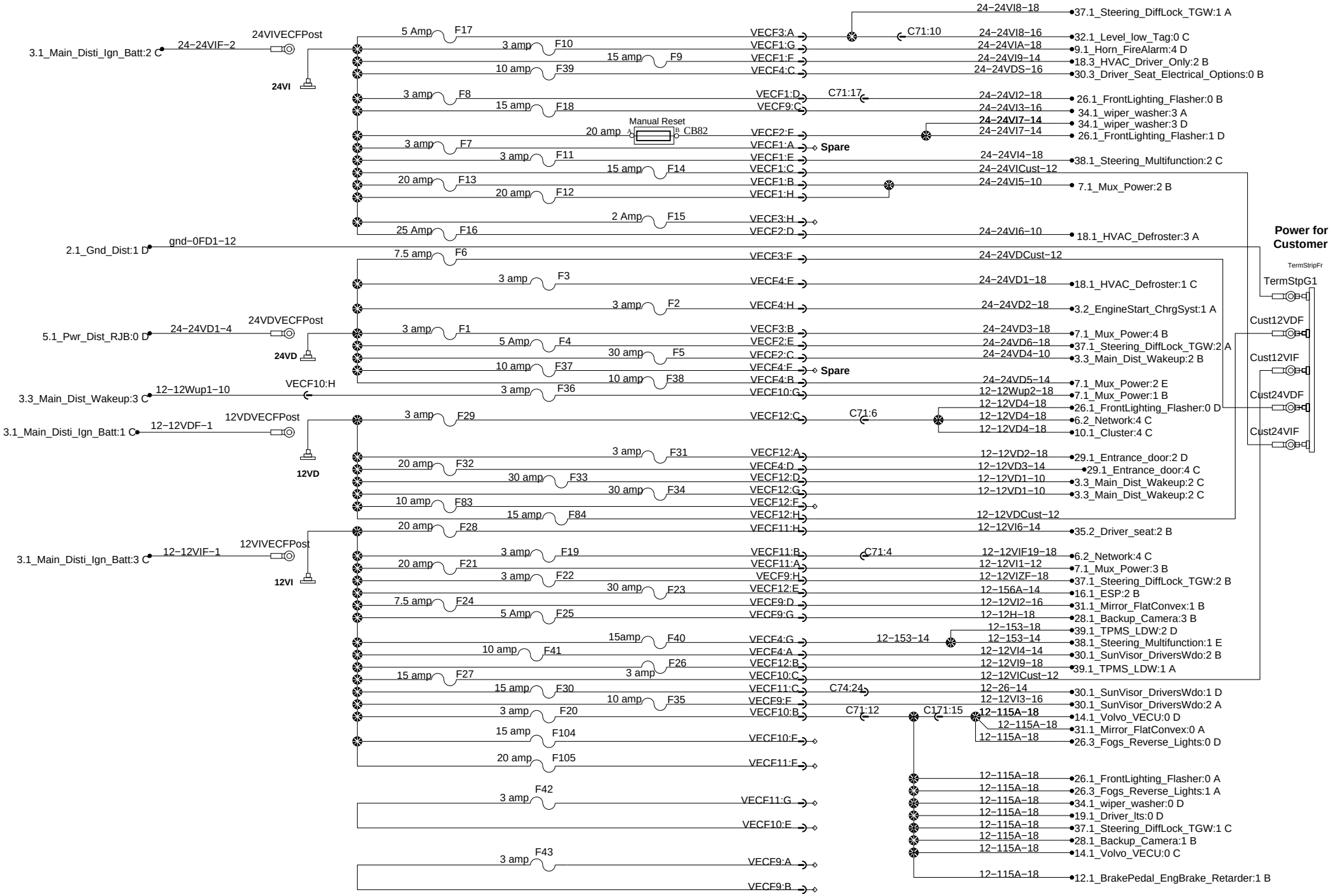

PREVOST®

WIRING DIAGRAM

No:D061360

Page:4.1

Rev:0

Power Distribution Front Junction Box

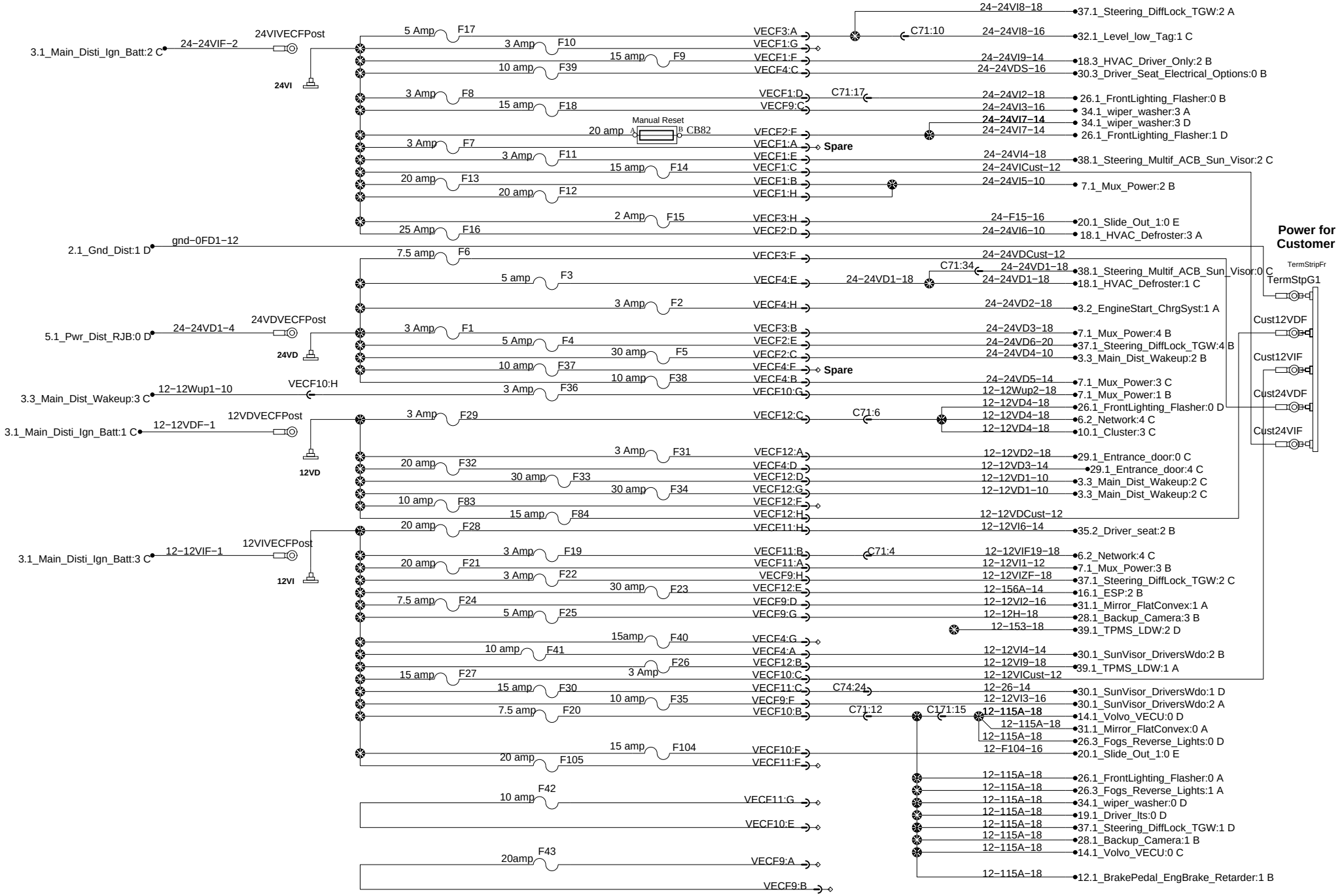

PREVOST®

WIRING DIAGRAM

No:D061360

Page:4.1

Rev:16

Power Distribution Front Junction Box

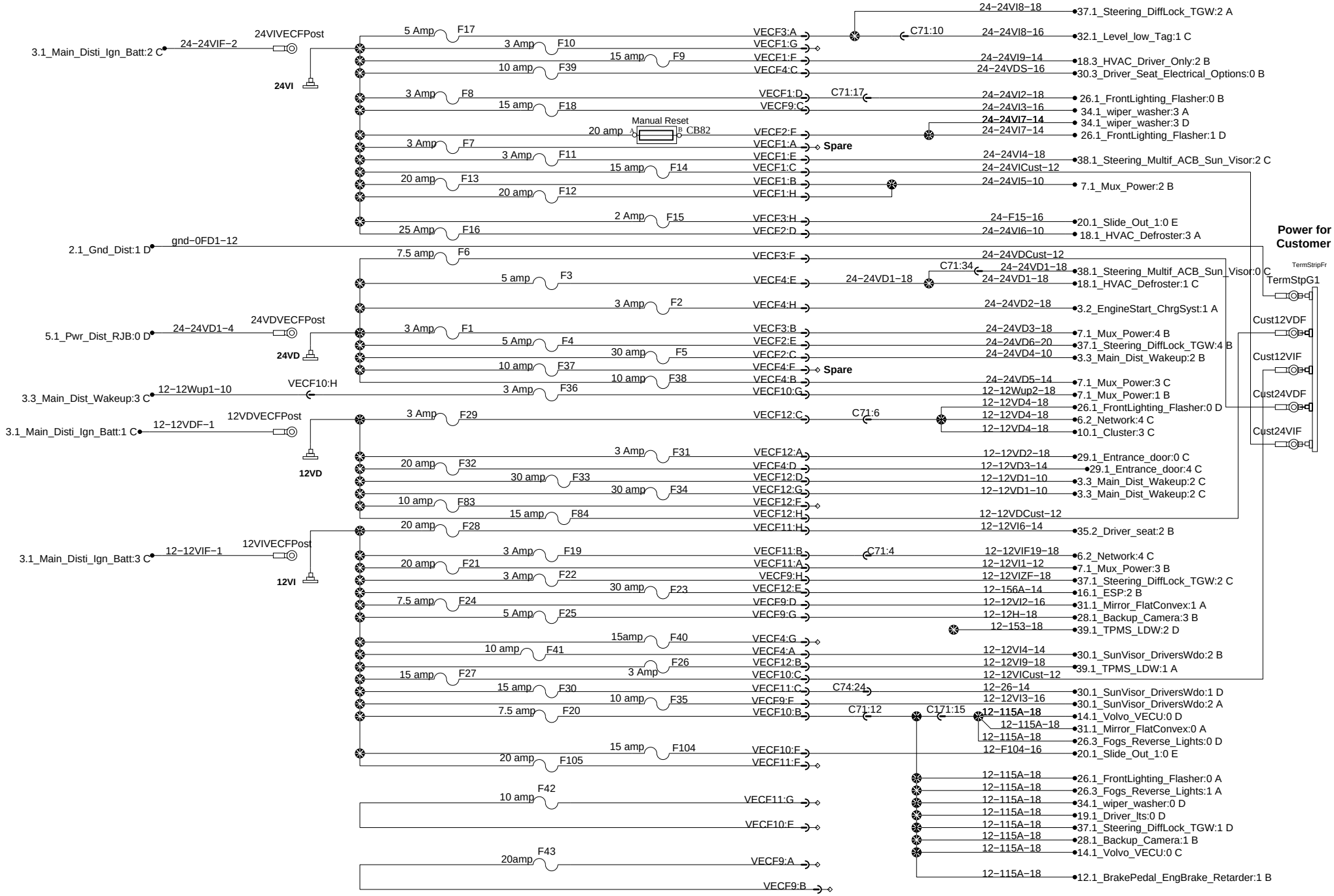

PREVOST®	WIRING DIAGRAM	No:D061360	Page:4.1	Rev:17

Power distribution Rear Junction box

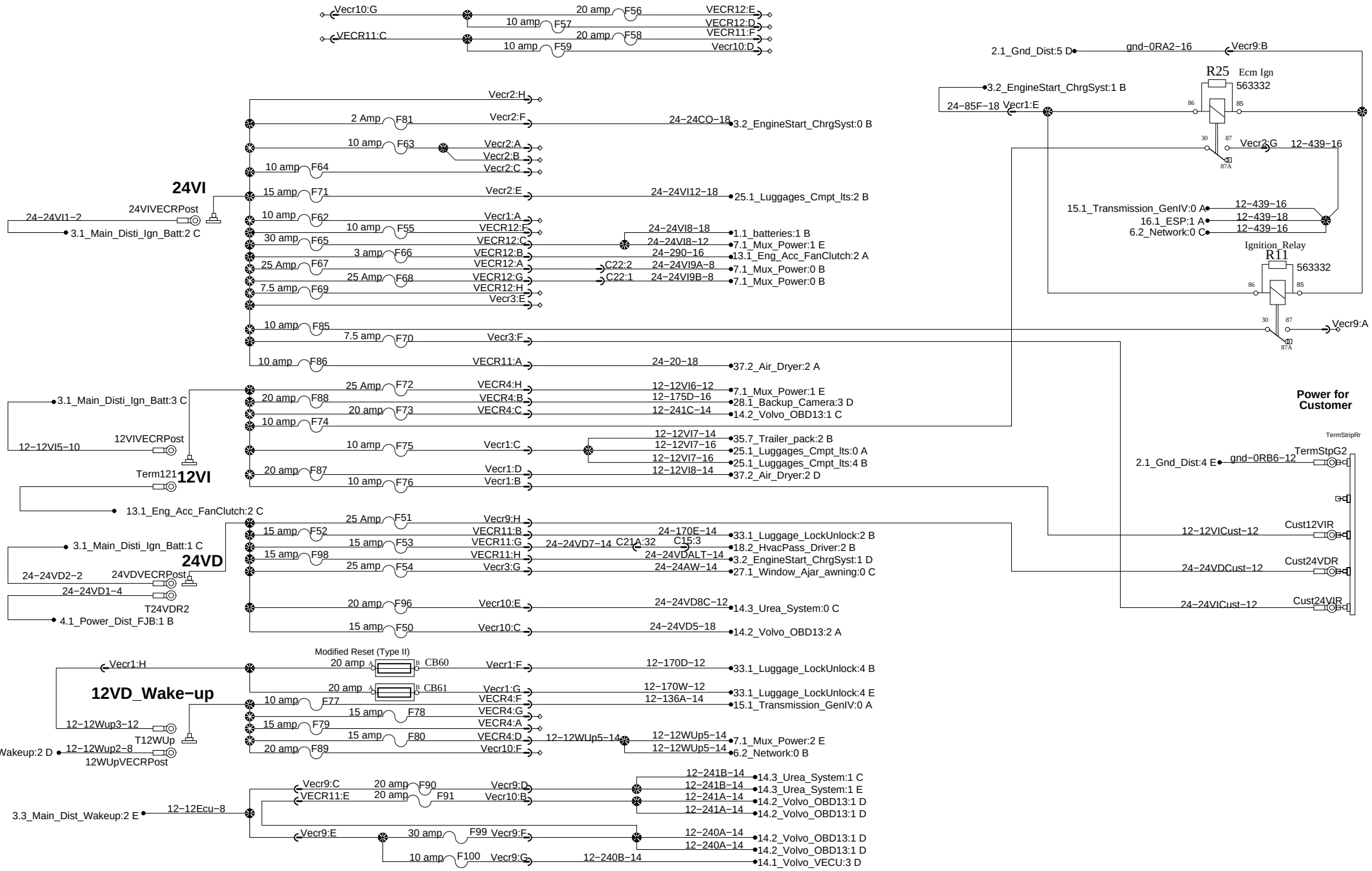

PREVOST®

WIRING DIAGRAM

No:D061360

Page:5.1

Rev:01

Power distribution Rear Junction box

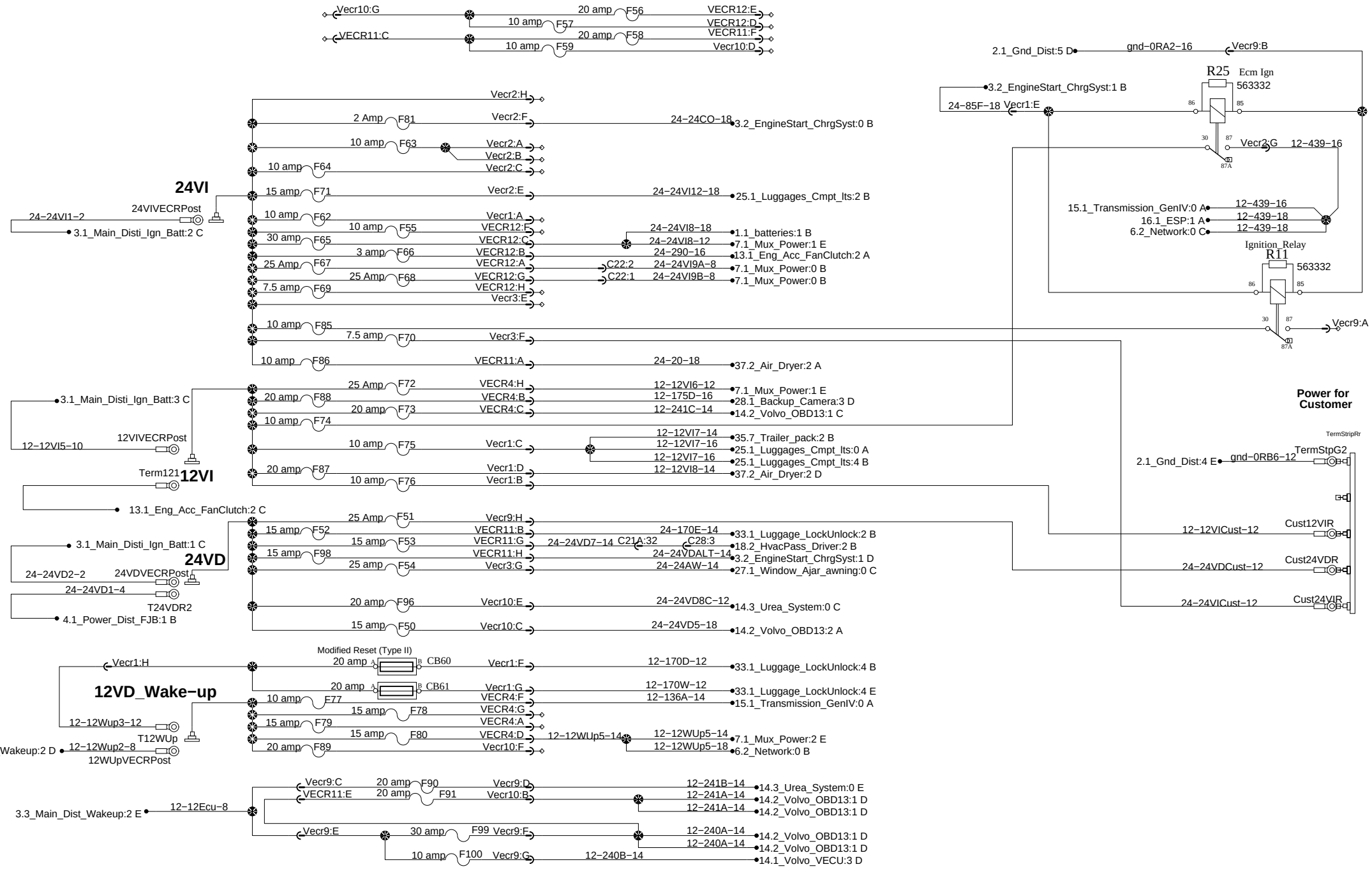

PREVOST®

WIRING DIAGRAM

No:D061360

Page:5.1

Rev:3

Power distribution Rear Junction box

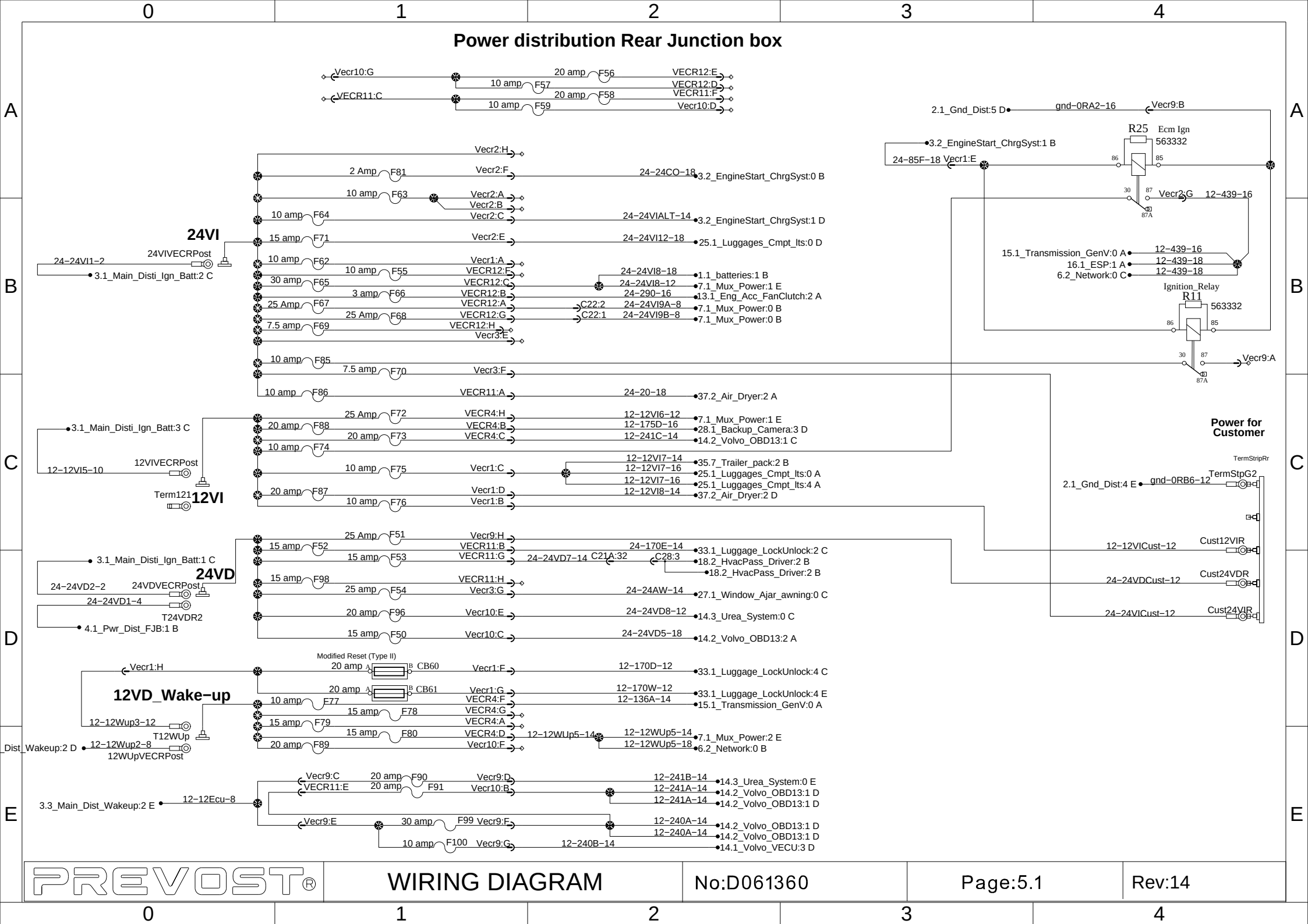

Multiplex Can, J1587 Network and Addressing

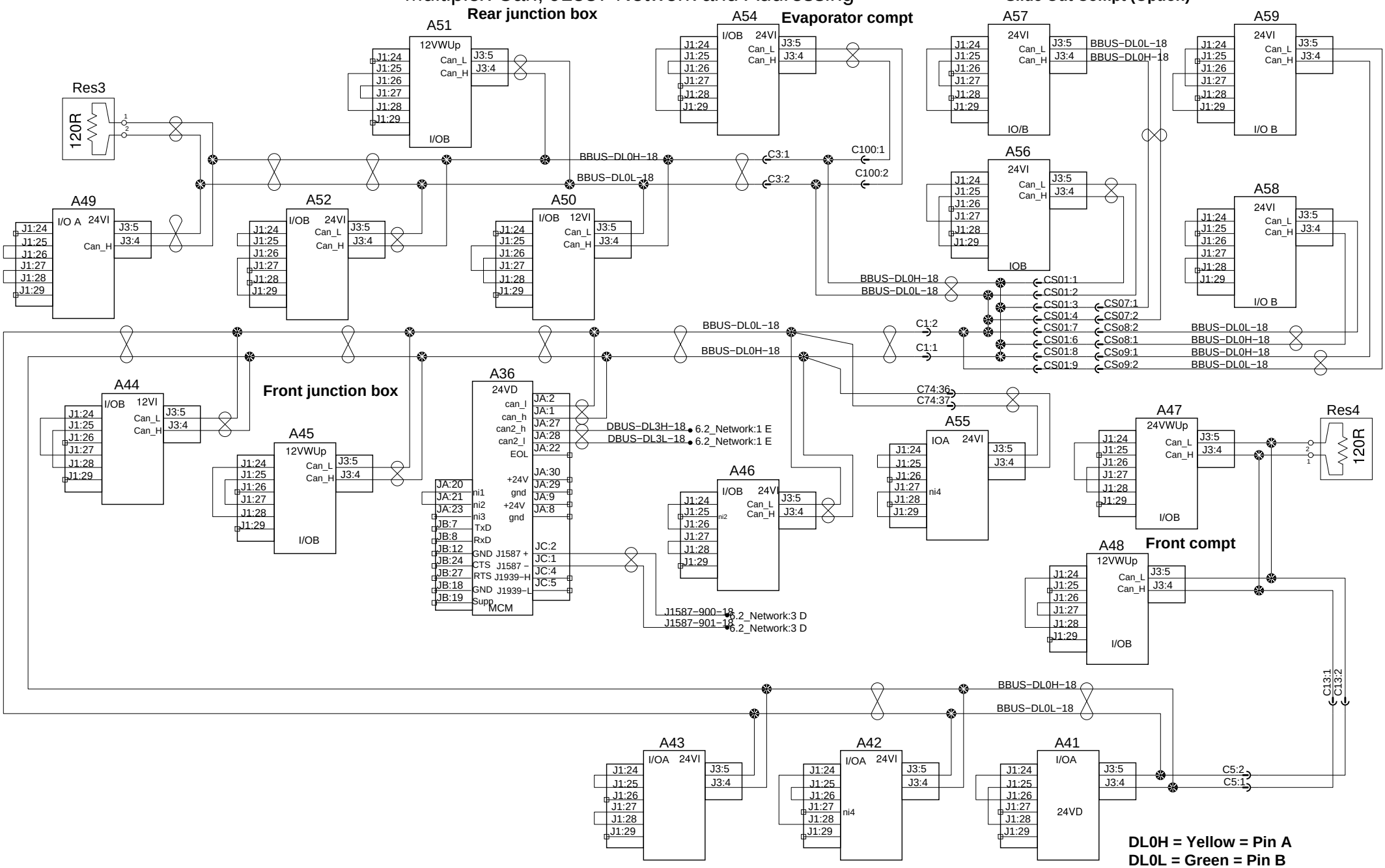

PREVOST®

WIRING DIAGRAM

No:D061360

Page:6.1

Rev:0

Multiplex Can, J1587 Network and Addressing

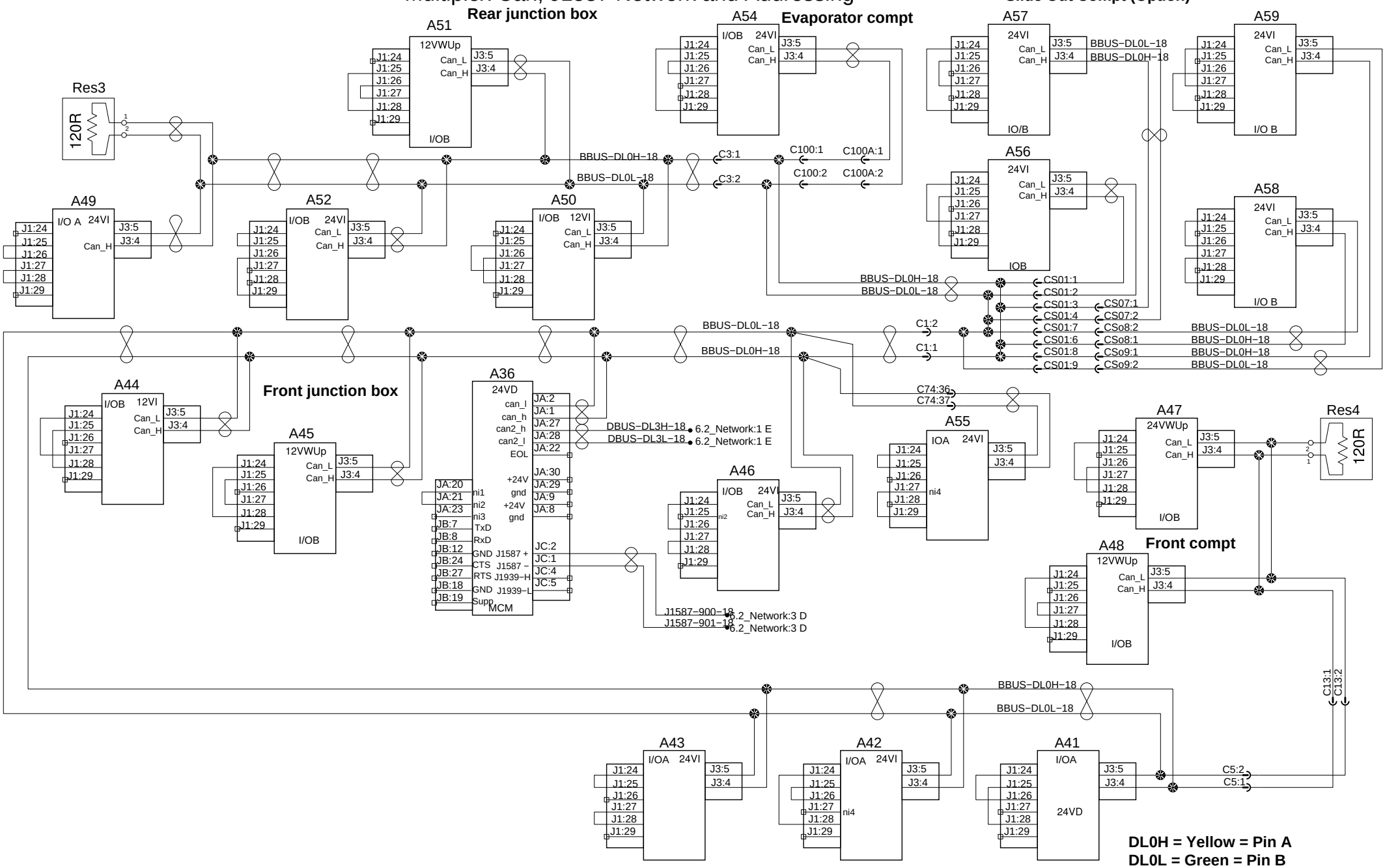

J1939, DBUS, J1587 and ISO OBD

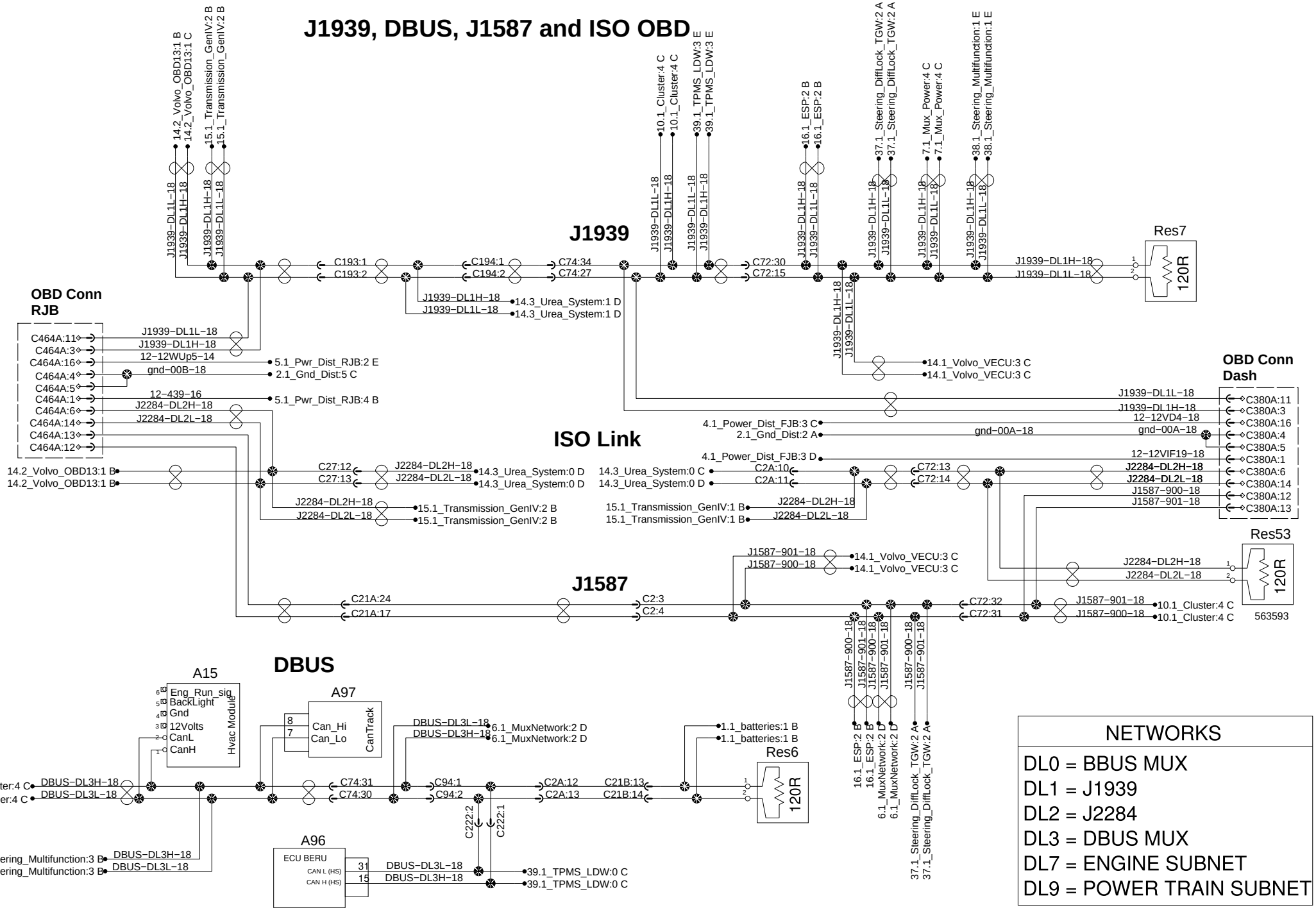

NETWORKS

DL0 = BBUS MUX
DL1 = J1939
DL2 = J2284
DL3 = DBUS MUX
DL7 = ENGINE SUBNET
DL9 = POWER TRAIN SUBNET

J1939, DBUS, J1587 and ISO OBD

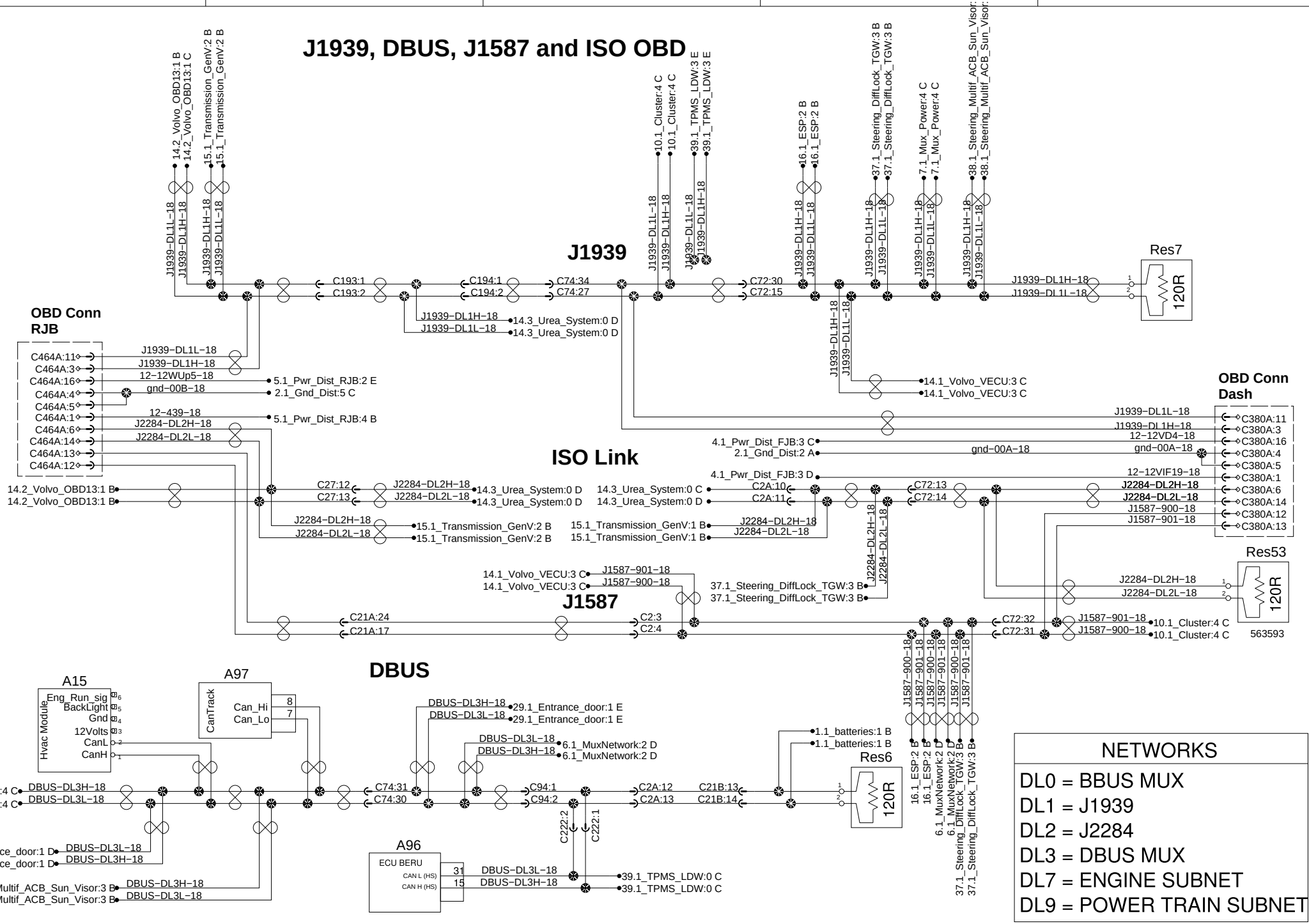

NETWORKS

DL0 = BBUS MUX
DL1 = J1939
DL2 = J2284
DL3 = DBUS MUX
DL7 = ENGINE SUBNET
DL9 = POWER TRAIN SUBNET

J1939, DBUS, J1587 and ISO OBD

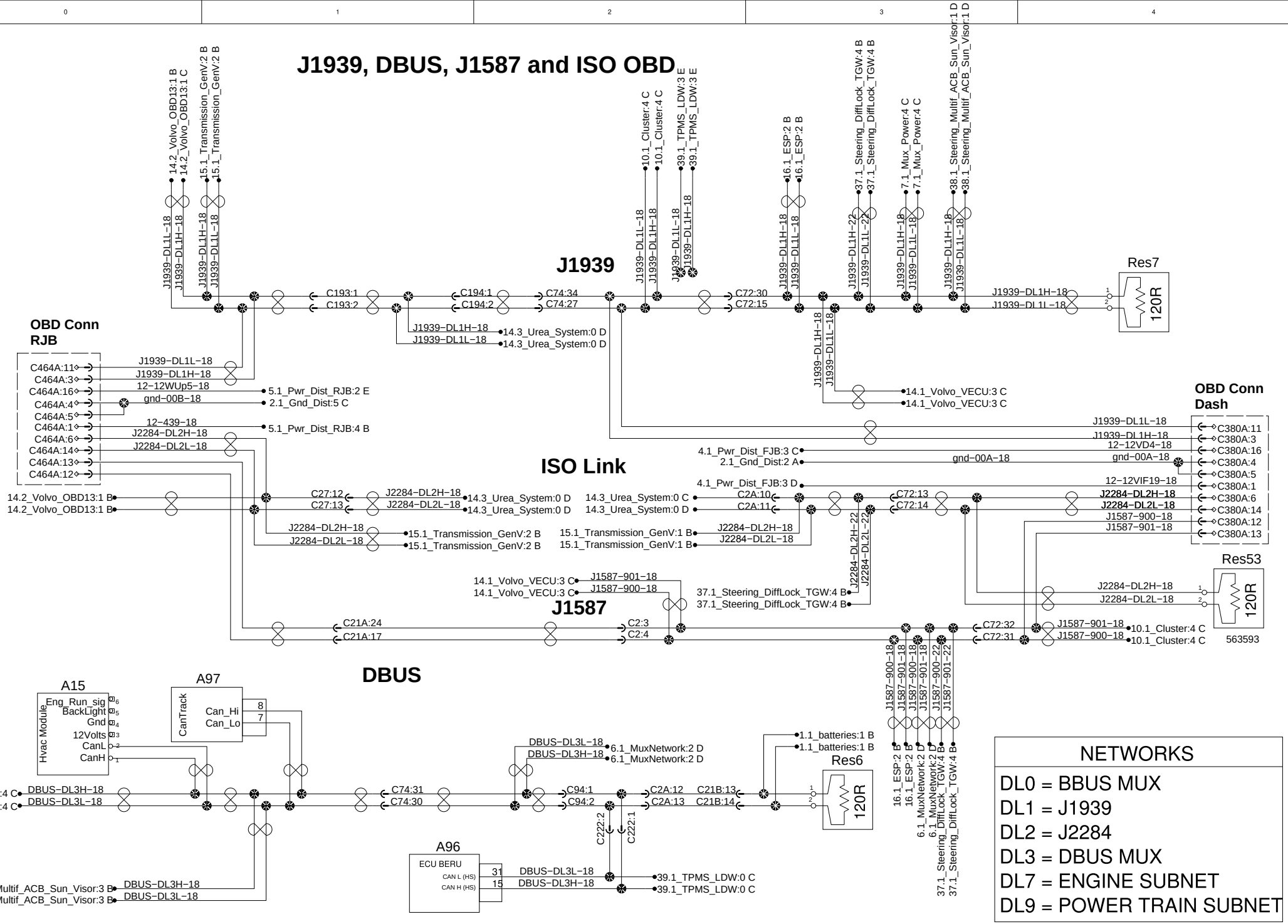

NETWORKS

DL0 = BBUS MUX
DL1 = J1939
DL2 = J2284
DL3 = DBUS MUX
DL7 = ENGINE SUBNET
DL9 = POWER TRAIN SUBNET

Multiplex Power Supply Distribution

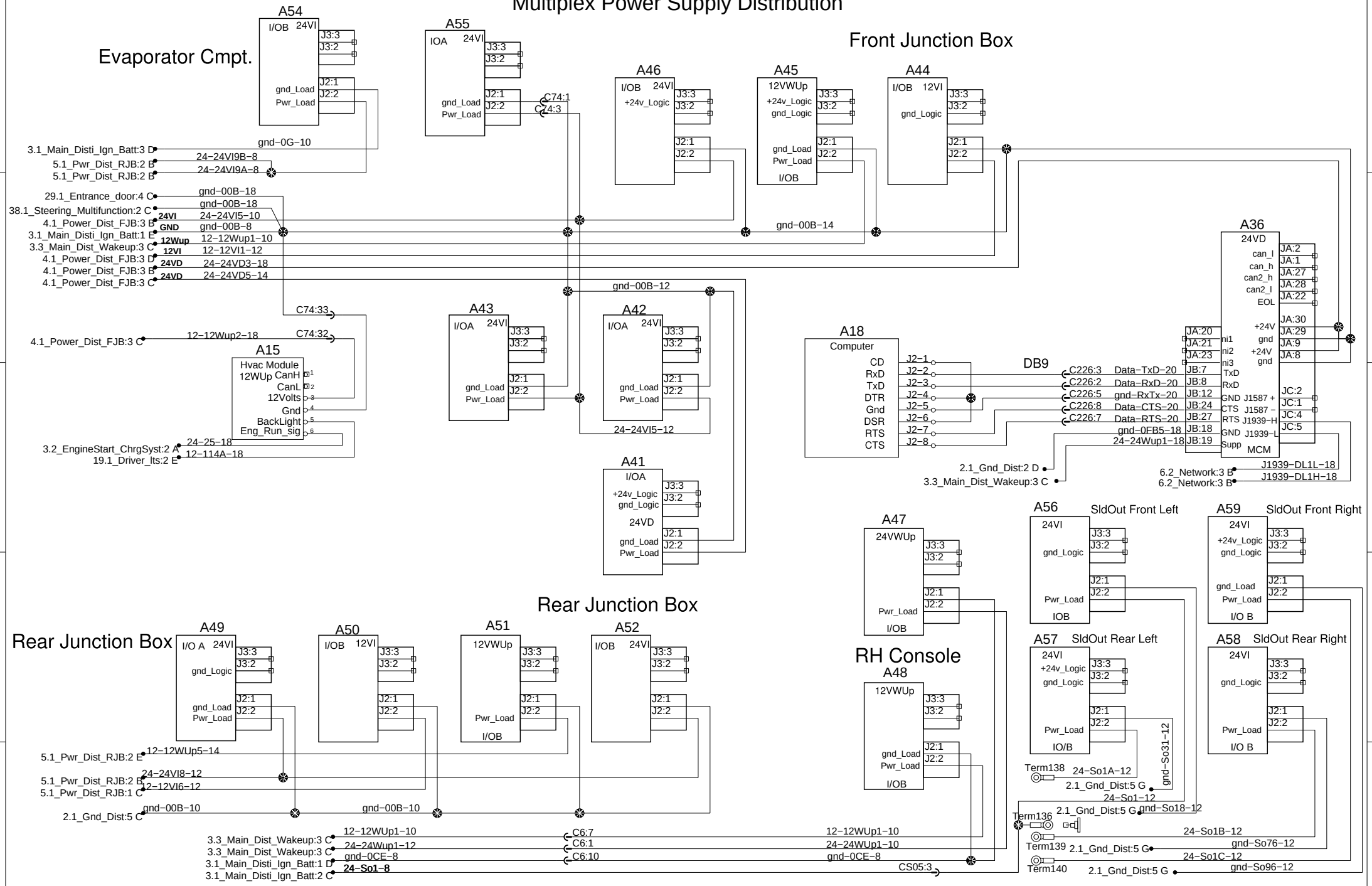

Multiplex Power Supply Distribution

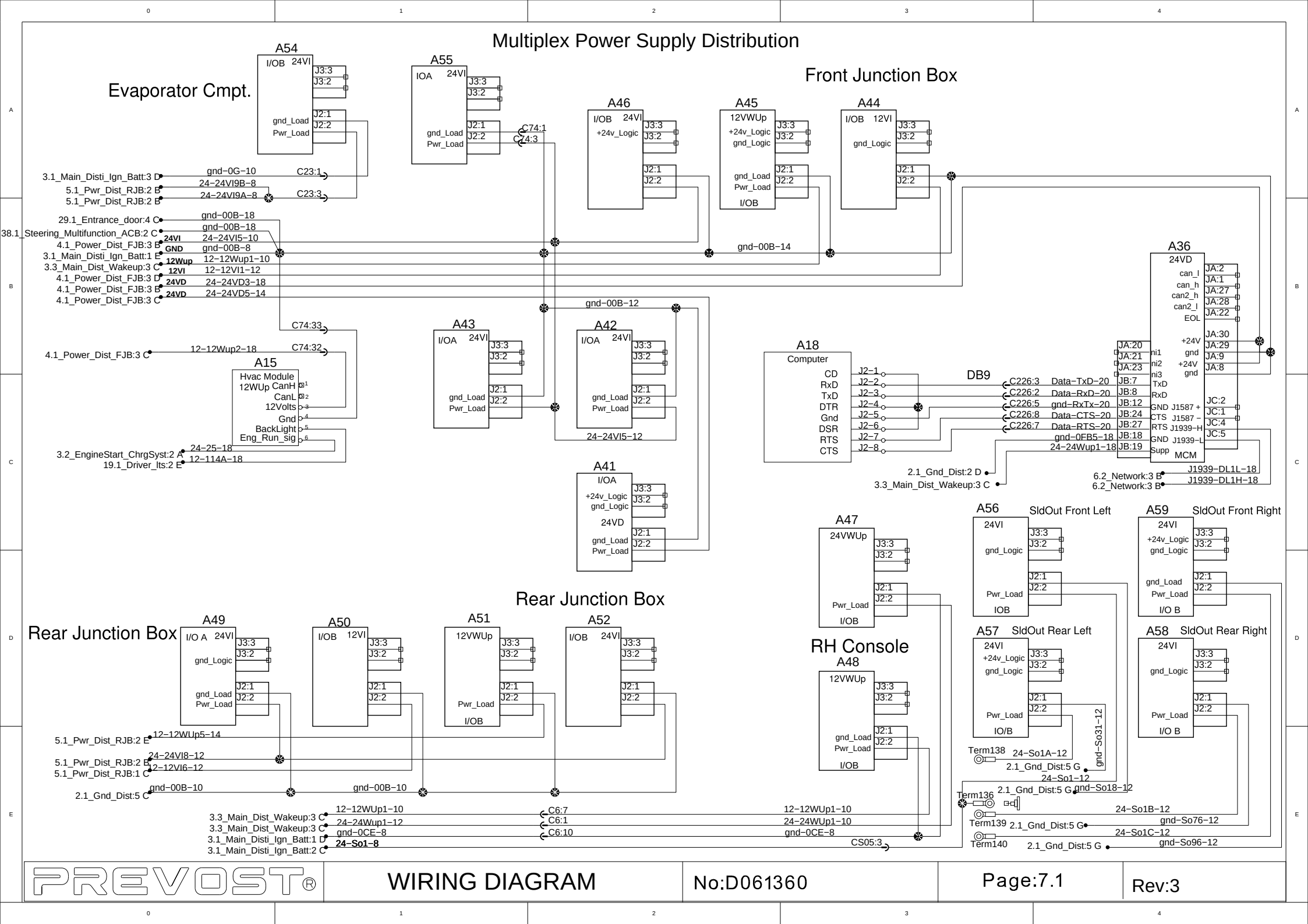

PREVOST®

WIRING DIAGRAM

No:D061360

Page:7.1

Rev:3

Multiplex Power Supply Distribution

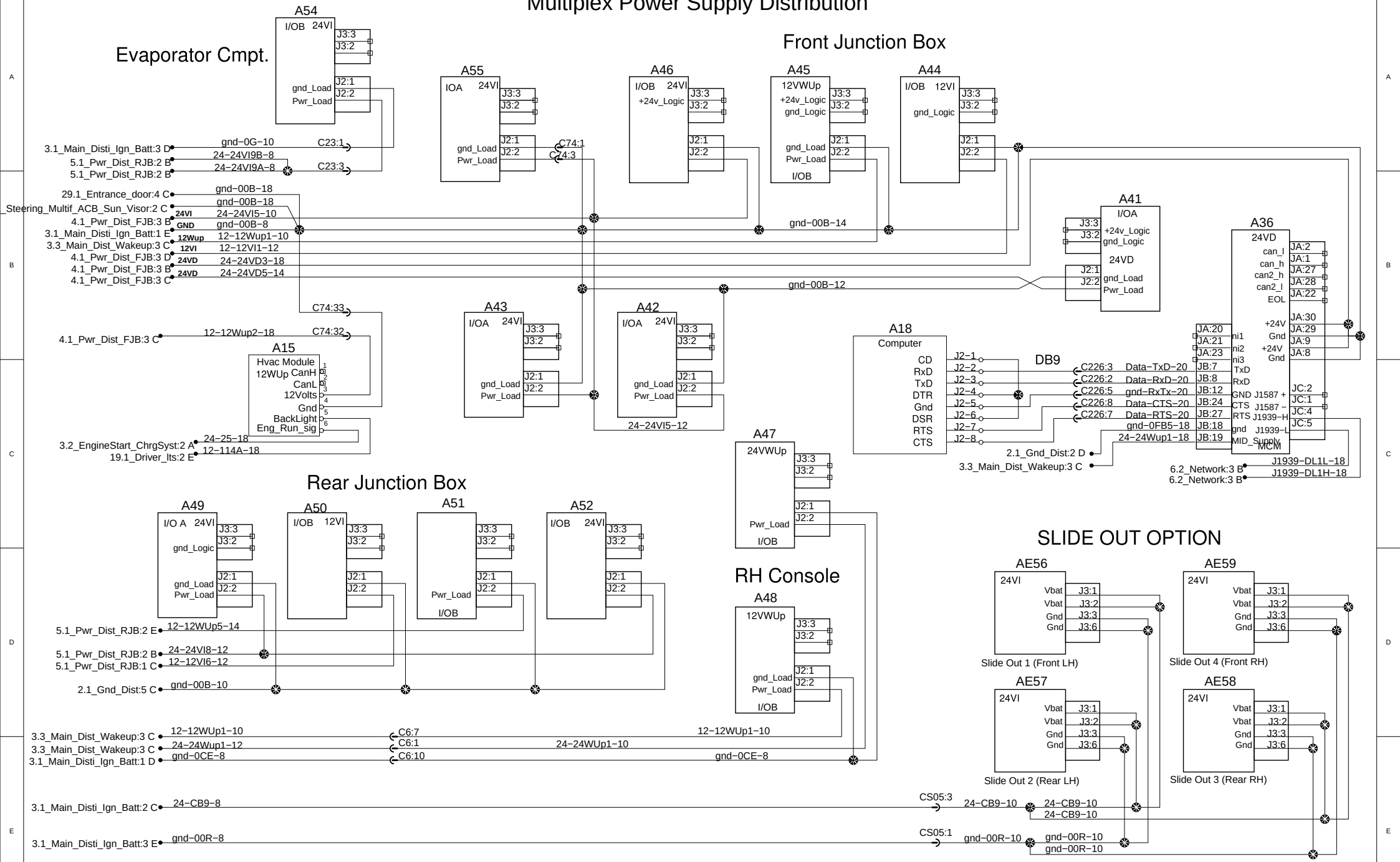

PREVOST®	WIRING DIAGRAM	No:D061360	Page:7.1	Rev:16

Spare Wires

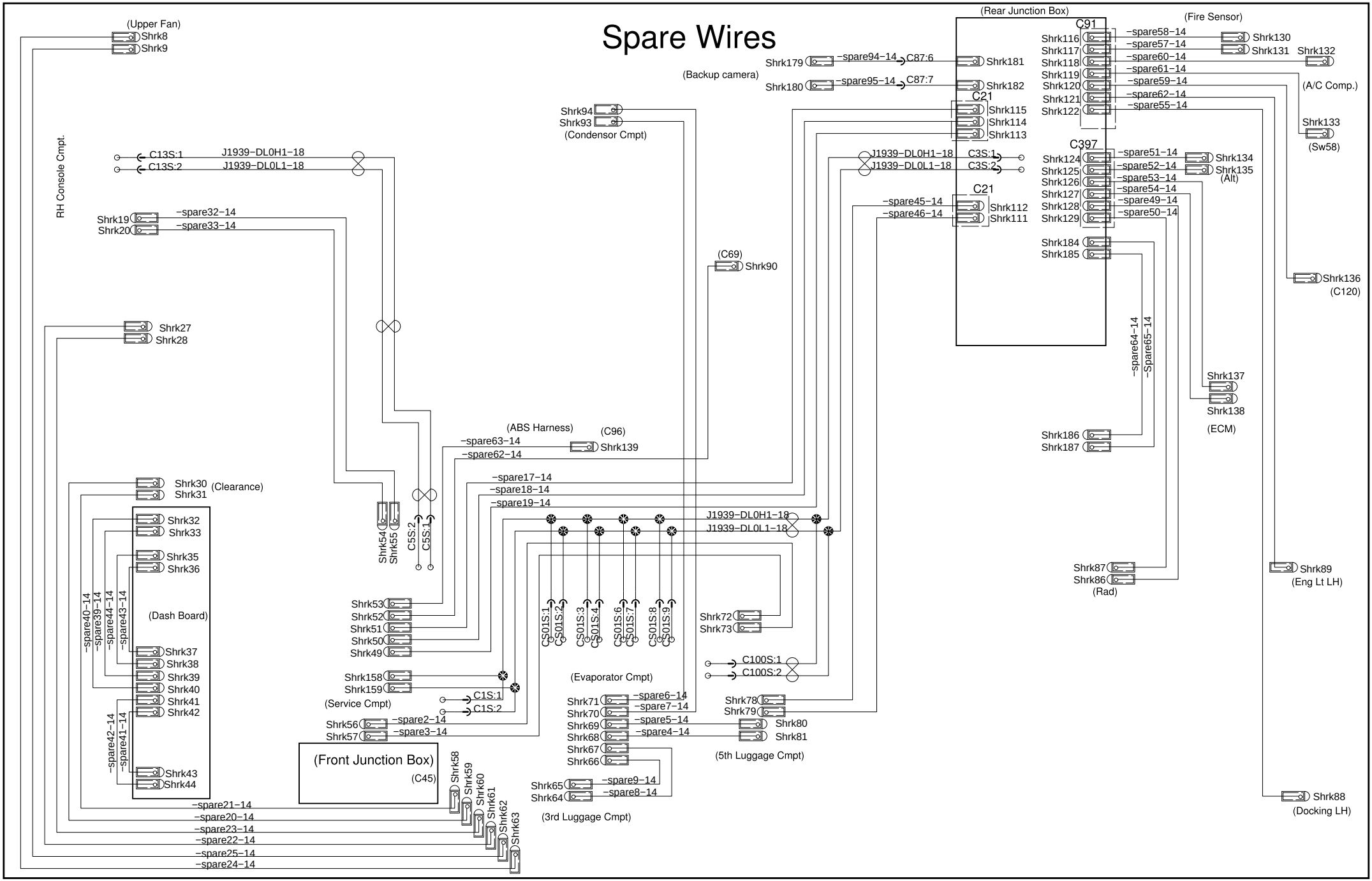

PREVOST®	WIRING DIAGRAM	No:D061360	Page:8.1	Rev:0

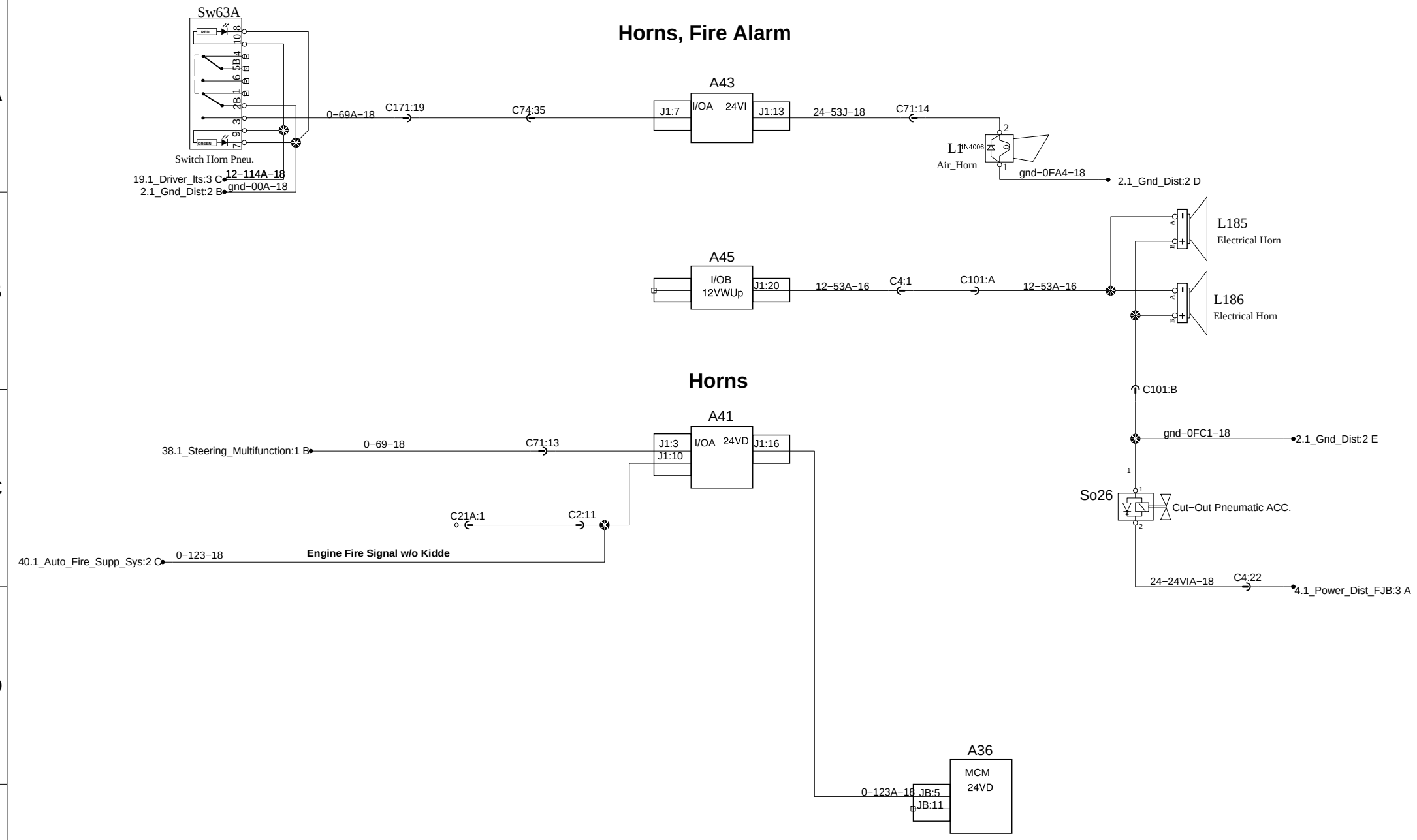

PREVOST®	WIRING DIAGRAM	No:D061360	Page:9.1	Rev:0

Horns, Fire Alarm

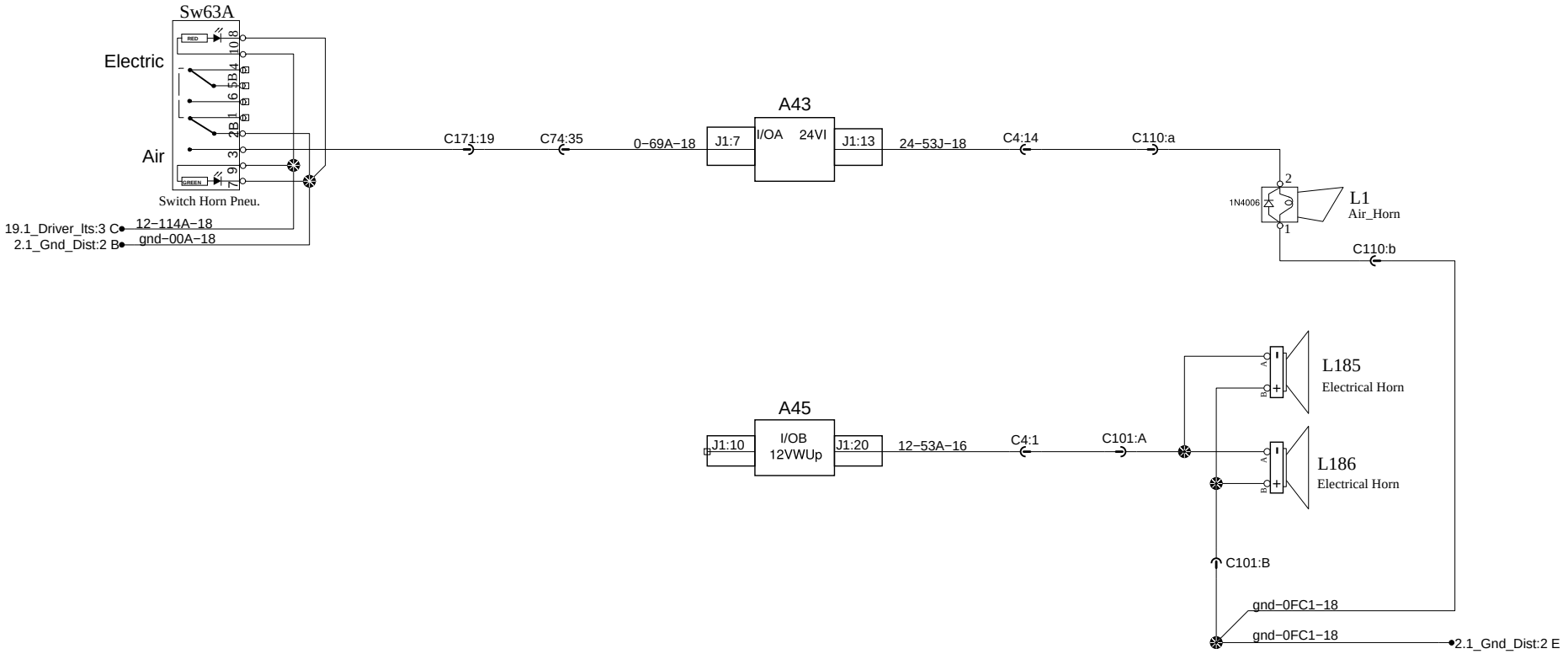

Horns

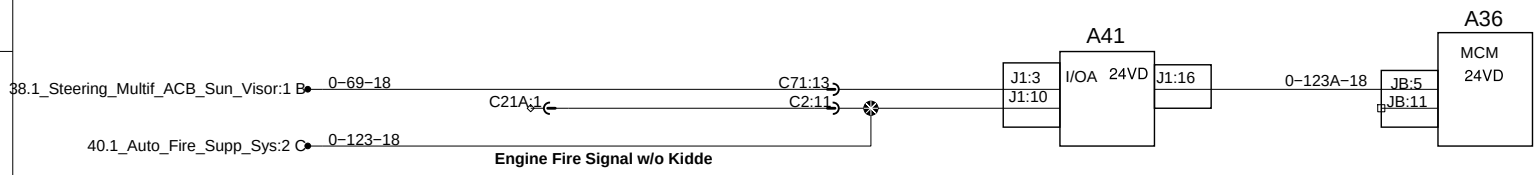

Horns, Fire Alarm

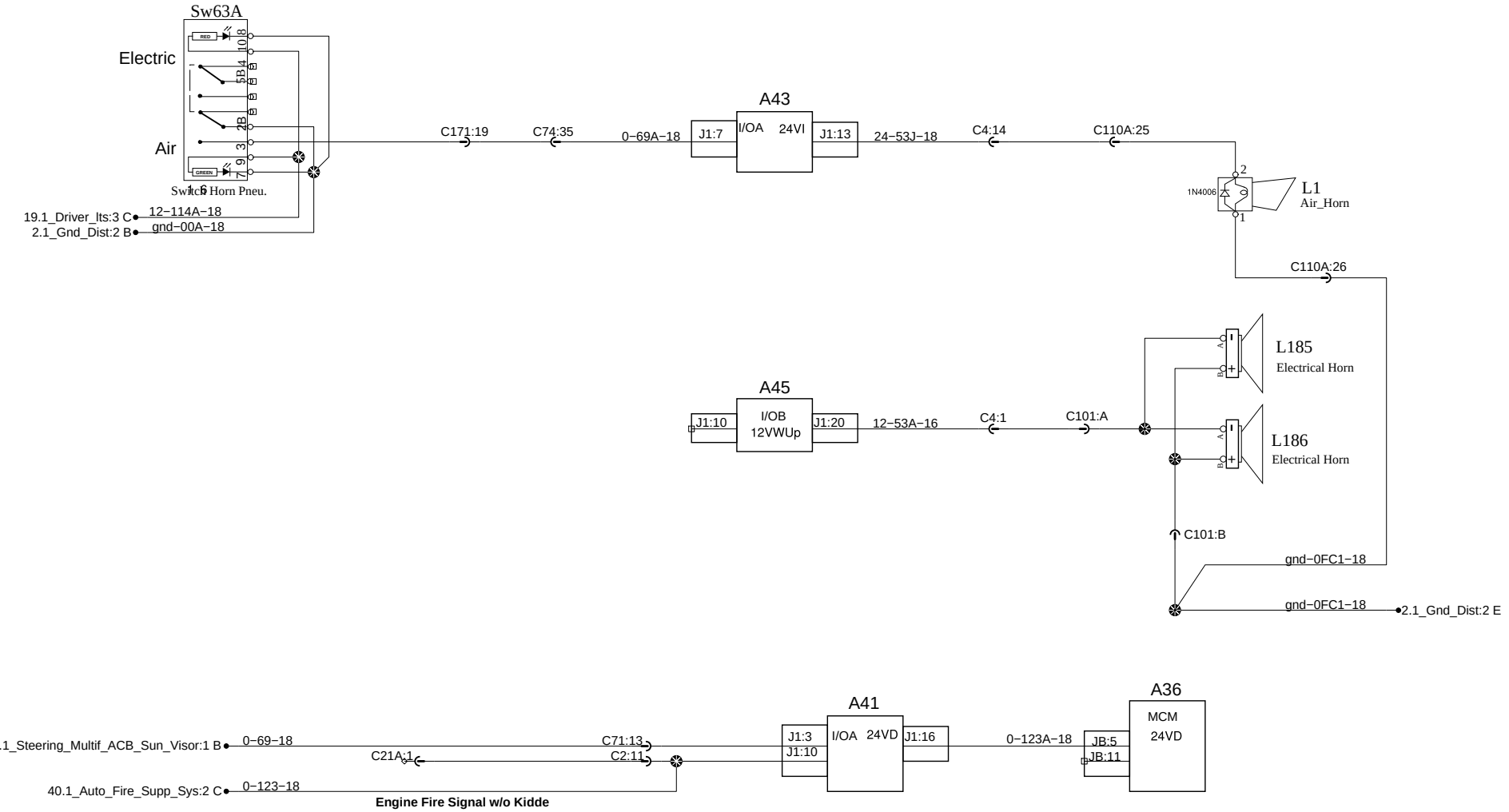

Cluster

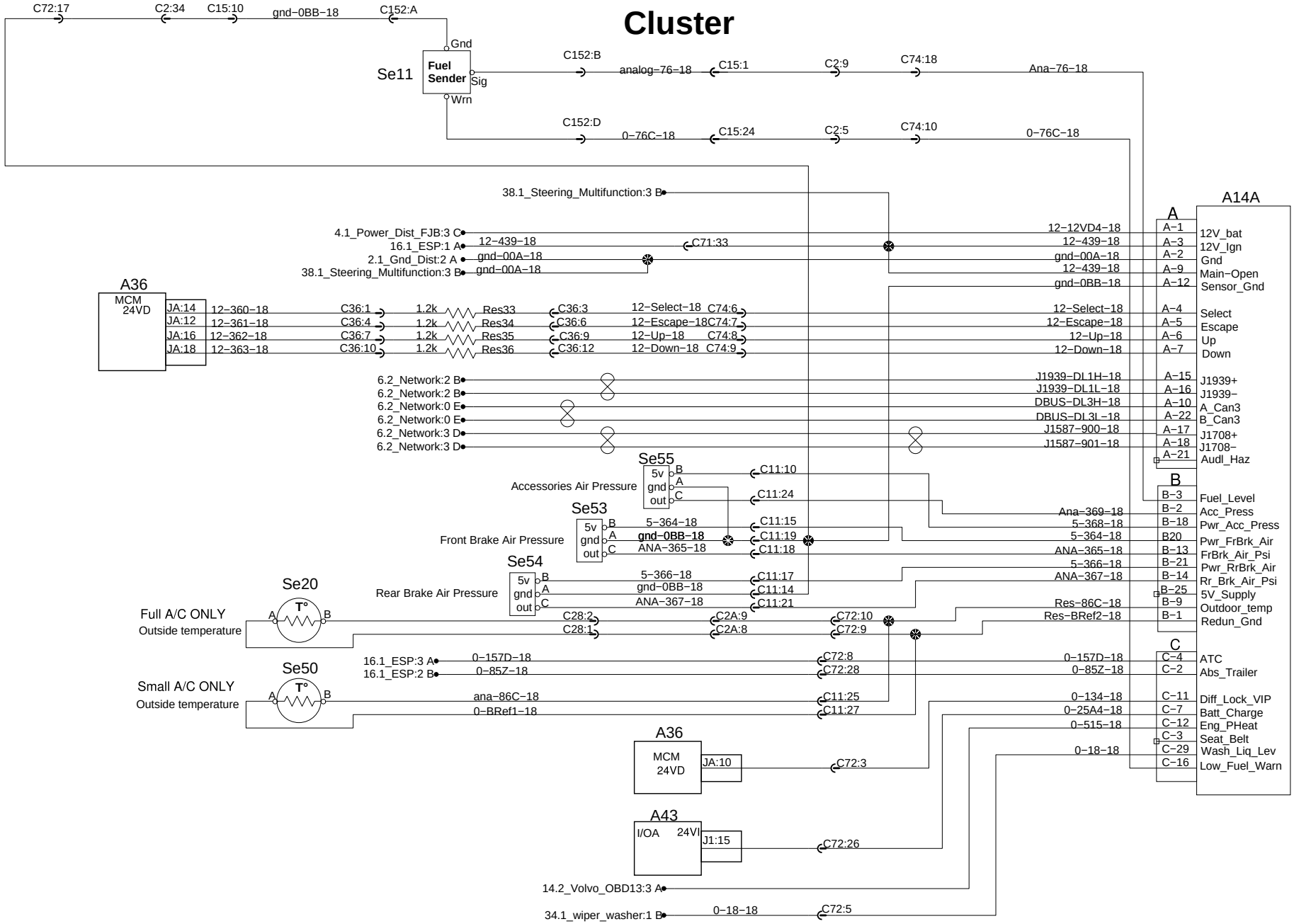
C72:17
C2:34
C15:10
gnd−0BB−18
C152:A
Gnd
Se11
Fuel Sender
Sig
Wrn
C152:B
analog−76−18
C15:1
C2:9
C74:18
Ana−76−18
C152:D
0−76C−18
C15:24
C2:5
C74:10
0−76C−18
38.1_Steering_Multifunction:3 B
4.1_Power_Dist_FJB:3 C
16.1_ESP:1 A
2.1_Gnd_Dist:2 A
38.1_Steering_Multifunction:3 B
12−439−18
gnd−00A−18
gnd−00A−18
C71:33
A36
MCM 24VD
JA:14
JA:12
JA:16
JA:18
12−360−18
12−361−18
12−362−18
12−363−18
C36:1
C36:4
C36:7
C36:10
1.2k
Res33
Res34
Res35
Res36
C36:3
C36:6
C36:9
C36:12
12−Select−18 C74:6
12−Escape−18 C74:7
12−Up−18 C74:8
12−Down−18 C74:9
6.2_Network:2 B
6.2_Network:2 B
6.2_Network:0 E
6.2_Network:0 E
6.2_Network:3 D
6.2_Network:3 D
Se55
5v
gnd
out
Accessories Air Pressure
C11:10
C11:24
Se53
Front Brake Air Pressure
5−364−18
gnd−0BB−18
ANA−365−18
C11:15
C11:19
C11:18
Se54
Rear Brake Air Pressure
5−366−18
gnd−0BB−18
ANA−367−18
C11:17
C11:14
C11:21
Se20
Full A/C ONLY
Outside temperature
T°
C28:2
C28:1
C2A:9
C2A:8
C72:10
C72:9
Se50
Small A/C ONLY
Outside temperature
16.1_ESP:3 A
16.1_ESP:2 B
0−157D−18
0−85Z−18
C72:8
C72:28
ana−86C−18
0−BRef1−18
C11:25
C11:27
A36
MCM 24VD
JA:10
C72:3
A43
I/OA 24VI
J1:15
C72:26
14.2_Volvo_OBD13:3 A
34.1_wiper_washer:1 B
0−18−18
C72:5
A14A
A
A−1 12V_bat
A−3 12V_Ign
A−2 Gnd
A−9 Main−Open
A−12 Sensor_Gnd
A−4 Select
A−5 Escape
A−6 Up
A−7 Down
A−15 J1939+
A−16 J1939−
A−10 A_Can3
A−22 B_Can3
A−17 J1708+
A−18 J1708−
A−21 Audl_Haz
B
B−3 Fuel_Level
B−2 Acc_Press
B−18 Pwr_Acc_Press
B20 Pwr_FrBrk_Air
B−13 FrBrk_Air_Psi
B−21 Pwr_RrBrk_Air
B−14 Rr_Brk_Air_Psi
B−25 5V_Supply
B−9 Outdoor_temp
B−1 Redun_Gnd
C
C−4 ATC
C−2 Abs_Trailer
C−11 Diff_Lock_VIP
C−7 Batt_Charge
C−12 Eng_PHeat
C−3 Seat_Belt
C−29 Wash_Liq_Lev
C−16 Low_Fuel_Warn
12−12VD4−18
12−439−18
gnd−00A−18
12−439−18
gnd−0BB−18
12−Select−18
12−Escape−18
12−Up−18
12−Down−18
J1939−DL1H−18
J1939−DL1L−18
DBUS−DL3H−18
DBUS−DL3L−18
J1587−900−18
J1587−901−18
Ana−369−18
5−368−18
5−364−18
ANA−365−18
5−366−18
ANA−367−18
Res−86C−18
Res−BRef2−18
0−157D−18
0−85Z−18
0−134−18
0−25A4−18
0−515−18
0−18−18

Cluster

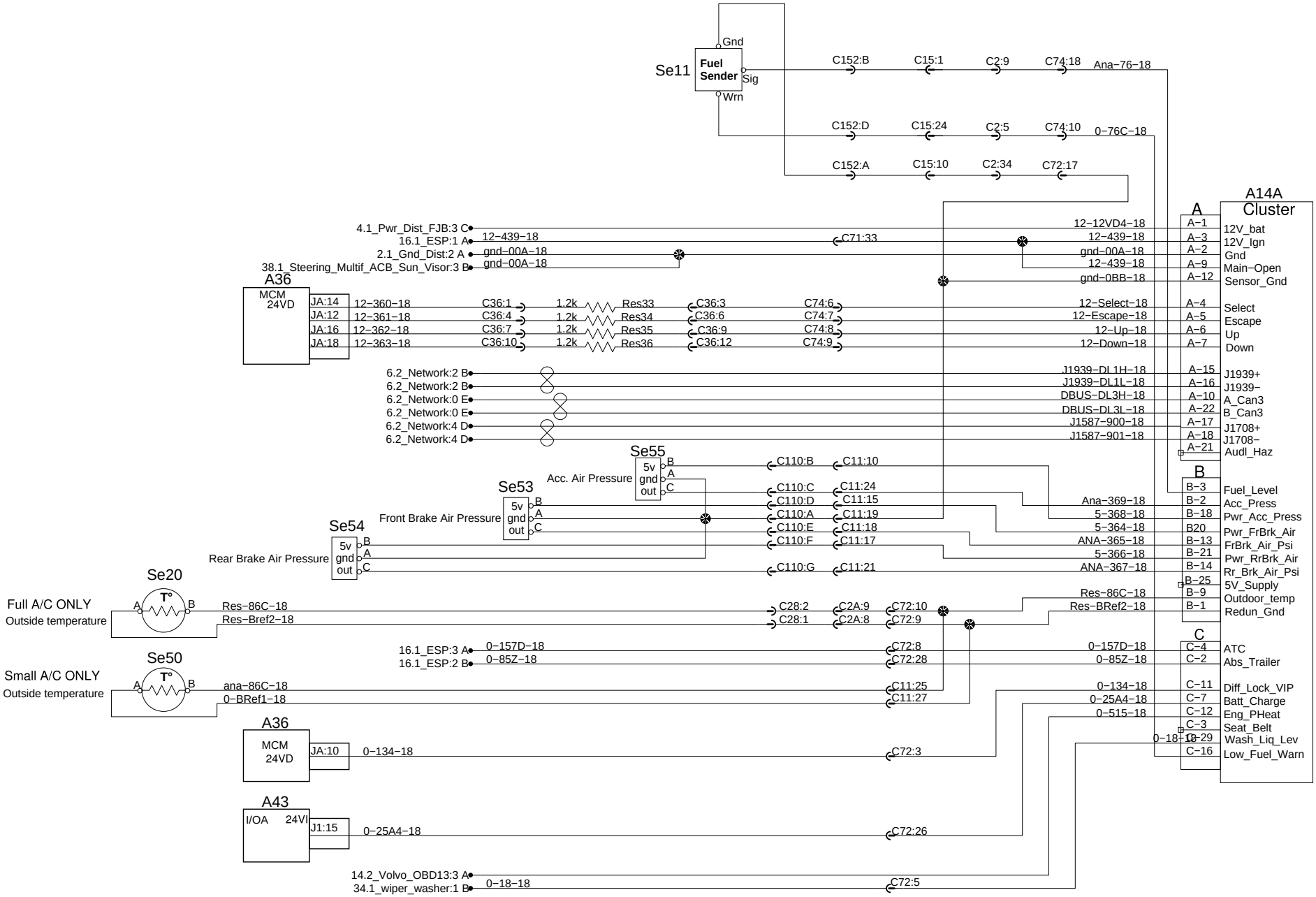
Se11
Fuel Sender
Gnd
Sig
Wrn
C152:B
C15:1
C2:9
C74:18
Ana−76−18
C152:D
C15:24
C2:5
C74:10
0−76C−18
C152:A
C15:10
C2:34
C72:17
A14A
Cluster
A
A−1 12V_bat
A−3 12V_Ign
A−2 Gnd
A−9 Main−Open
A−12 Sensor_Gnd
A−4 Select
A−5 Escape
A−6 Up
A−7 Down
A−15 J1939+
A−16 J1939−
A−10 A_Can3
A−22 B_Can3
A−17 J1708+
A−18 J1708−
A−21 Audl_Haz
B
B−3 Fuel_Level
B−2 Acc_Press
B−18 Pwr_Acc_Press
B20 Pwr_FrBrk_Air
B−13 FrBrk_Air_Psi
B−21 Pwr_RrBrk_Air
B−14 Rr_Brk_Air_Psi
B−25 5V_Supply
B−9 Outdoor_temp
B−1 Redun_Gnd
C
C−4 ATC
C−2 Abs_Trailer
C−11 Diff_Lock_VIP
C−7 Batt_Charge
C−12 Eng_PHeat
C−3 Seat_Belt
C−29 Wash_Liq_Lev
C−16 Low_Fuel_Warn
4.1_Pwr_Dist_FJB:3 C
16.1_ESP:1 A
2.1_Gnd_Dist:2 A
38.1_Steering_Multif_ACB_Sun_Visor:3 B
12−439−18
gnd−00A−18
gnd−00A−18
C71:33
12−12VD4−18
12−439−18
gnd−00A−18
12−439−18
gnd−0BB−18
A36
MCM 24VD
JA:14 12−360−18
JA:12 12−361−18
JA:16 12−362−18
JA:18 12−363−18
C36:1
C36:4
C36:7
C36:10
1.2k Res33
1.2k Res34
1.2k Res35
1.2k Res36
C36:3
C36:6
C36:9
C36:12
C74:6
C74:7
C74:8
C74:9
12−Select−18
12−Escape−18
12−Up−18
12−Down−18
6.2_Network:2 B
6.2_Network:2 B
6.2_Network:0 E
6.2_Network:0 E
6.2_Network:4 D
6.2_Network:4 D
J1939−DL1H−18
J1939−DL1L−18
DBUS−DL3H−18
DBUS−DL3L−18
J1587−900−18
J1587−901−18
Se55
5v gnd out
Acc. Air Pressure
Se53
Front Brake Air Pressure
Se54
Rear Brake Air Pressure
C110:B
C11:10
C110:C
C11:24
C110:D
C11:15
C110:A
C11:19
C110:E
C11:18
C110:F
C11:17
C110:G
C11:21
Ana−369−18
5−368−18
5−364−18
ANA−365−18
5−366−18
ANA−367−18
Se20
Full A/C ONLY
Outside temperature
Res−86C−18
Res−Bref2−18
C28:2
C28:1
C2A:9
C2A:8
C72:10
C72:9
Res−86C−18
Res−BRef2−18
Se50
Small A/C ONLY
Outside temperature
ana−86C−18
0−BRef1−18
16.1_ESP:3 A
16.1_ESP:2 B
0−157D−18
0−85Z−18
C72:8
C72:28
C11:25
C11:27
0−157D−18
0−85Z−18
0−134−18
0−25A4−18
0−515−18
A36
MCM 24VD
JA:10
0−134−18
C72:3
A43
I/OA 24VI
J1:15
0−25A4−18
C72:26
14.2_Volvo_OBD13:3 A
34.1_wiper_washer:1 B
0−18−18
C72:5
0−18−18

Cluster

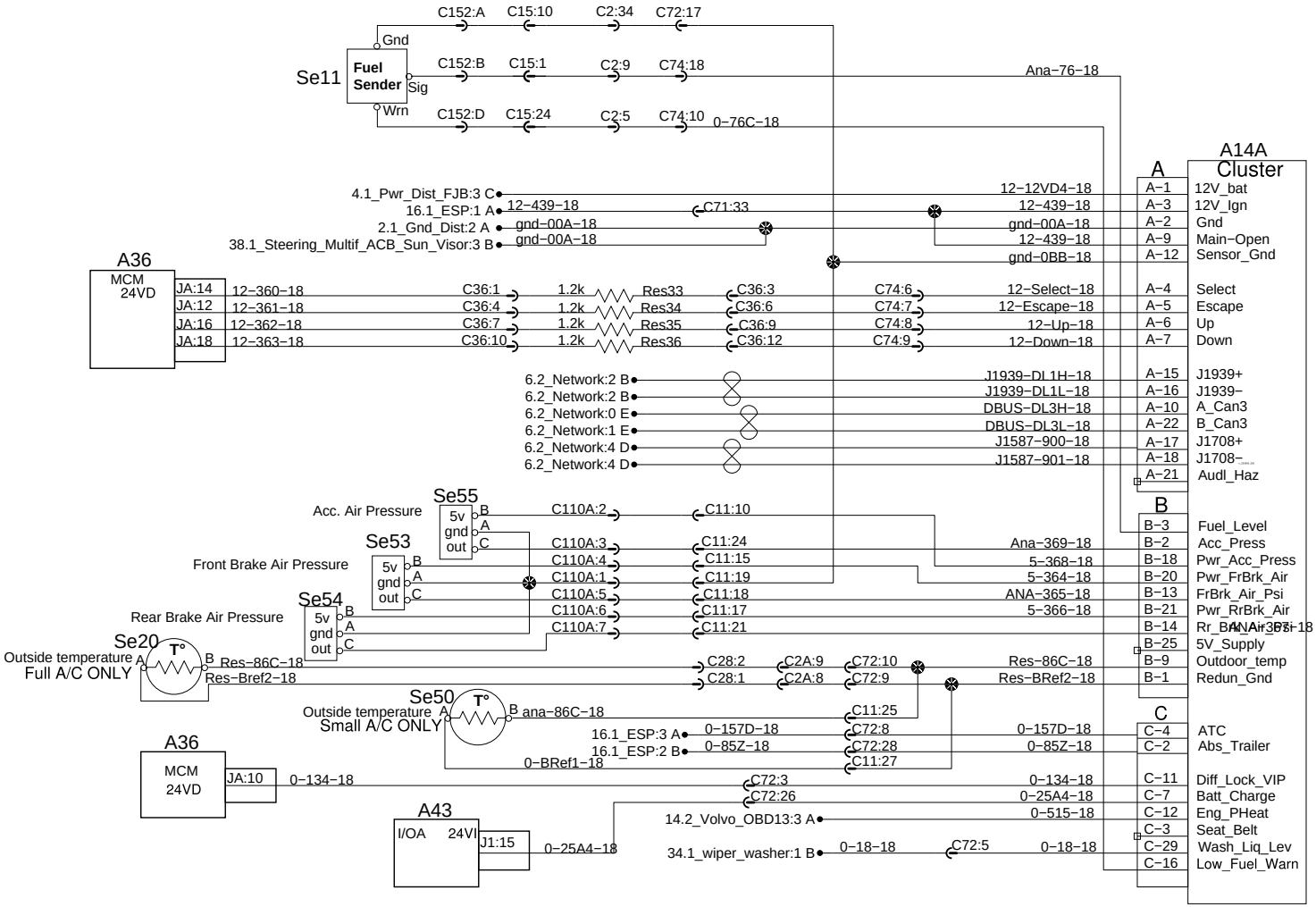
Se11
Fuel Sender
Gnd
Sig
Wrn
C152:A C15:10 C2:34 C72:17
C152:B C15:1 C2:9 C74:18
C152:D C15:24 C2:5 C74:10
Ana-76-18
0-76C-18
A14A Cluster
A36 MCM 24VD
JA:14 12-360-18
JA:12 12-361-18
JA:16 12-362-18
JA:18 12-363-18
C36:1 C36:4 C36:7 C36:10
1.2k Res33 Res34 Res35 Res36
C36:3 C36:6 C36:9 C36:12
C74:6 C74:7 C74:8 C74:9
12-Select-18
12-Escape-18
12-Up-18
12-Down-18
4.1_Pwr_Dist_FJB:3 C
16.1_ESP:1 A
2.1_Gnd_Dist:2 A
38.1_Steering_Multif_ACB_Sun_Visor:3 B
12-439-18
C71:33
gnd-00A-18
gnd-00A-18
12-12VD4-18
12-439-18
gnd-00A-18
12-439-18
gnd-0BB-18
A-1 12V_bat
A-3 12V_Ign
A-2 Gnd
A-9 Main-Open
A-12 Sensor_Gnd
A-4 Select
A-5 Escape
A-6 Up
A-7 Down
6.2_Network:2 B
6.2_Network:2 B
6.2_Network:0 E
6.2_Network:1 E
6.2_Network:4 D
6.2_Network:4 D
J1939-DL1H-18
J1939-DL1L-18
DBUS-DL3H-18
DBUS-DL3L-18
J1587-900-18
J1587-901-18
A-15 J1939+
A-16 J1939-
A-10 A_Can3
A-22 B_Can3
A-17 J1708+
A-18 J1708-
A-21 Audl_Haz
Se55 5v gnd out
Acc. Air Pressure
C110A:2
C11:10
Se53 5v gnd out
Front Brake Air Pressure
C110A:3 C110A:4 C110A:1
C11:24 C11:15 C11:19
Ana-369-18
5-368-18
5-364-18
Se54 5v gnd out
Rear Brake Air Pressure
C110A:5 C110A:6 C110A:7
C11:18 C11:17 C11:21
ANA-365-18
5-366-18
Se20 T°
Outside temperature
Full A/C ONLY
Res-86C-18
Res-Bref2-18
C28:2 C28:1
C2A:9 C2A:8
C72:10 C72:9
Res-86C-18
Res-BRef2-18
Se50 T°
Outside temperature
Small A/C ONLY
ana-86C-18
C11:25
16.1_ESP:3 A
16.1_ESP:2 B
0-BRef1-18
0-157D-18
0-85Z-18
C11:27
C72:8
C72:28
0-157D-18
0-85Z-18
B-3 Fuel_Level
B-2 Acc_Press
B-18 Pwr_Acc_Press
B-20 Pwr_FrBrk_Air
B-13 FrBrk_Air_Psi
B-21 Pwr_RrBrk_Air
B-14 Rr_Brk_Air_Psi
B-25 5V_Supply
B-9 Outdoor_temp
B-1 Redun_Gnd
C-4 ATC
C-2 Abs_Trailer
A36 MCM 24VD
JA:10
0-134-18
C72:3
C72:26
0-134-18
0-25A4-18
C-11 Diff_Lock_VIP
C-7 Batt_Charge
A43 I/OA 24VI
J1:15
0-25A4-18
14.2_Volvo_OBD13:3 A
34.1_wiper_washer:1 B
0-515-18
0-18-18
C72:5
0-18-18
C-12 Eng_PHeat
C-3 Seat_Belt
C-29 Wash_Liq_Lev
C-16 Low_Fuel_Warn

Rear Junction Box Door Fan

ENGINE BLOCK HEATER

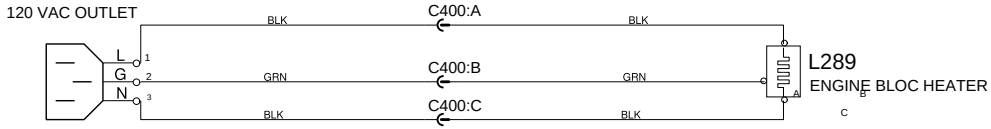

Brake, Engine Brake and Retarder

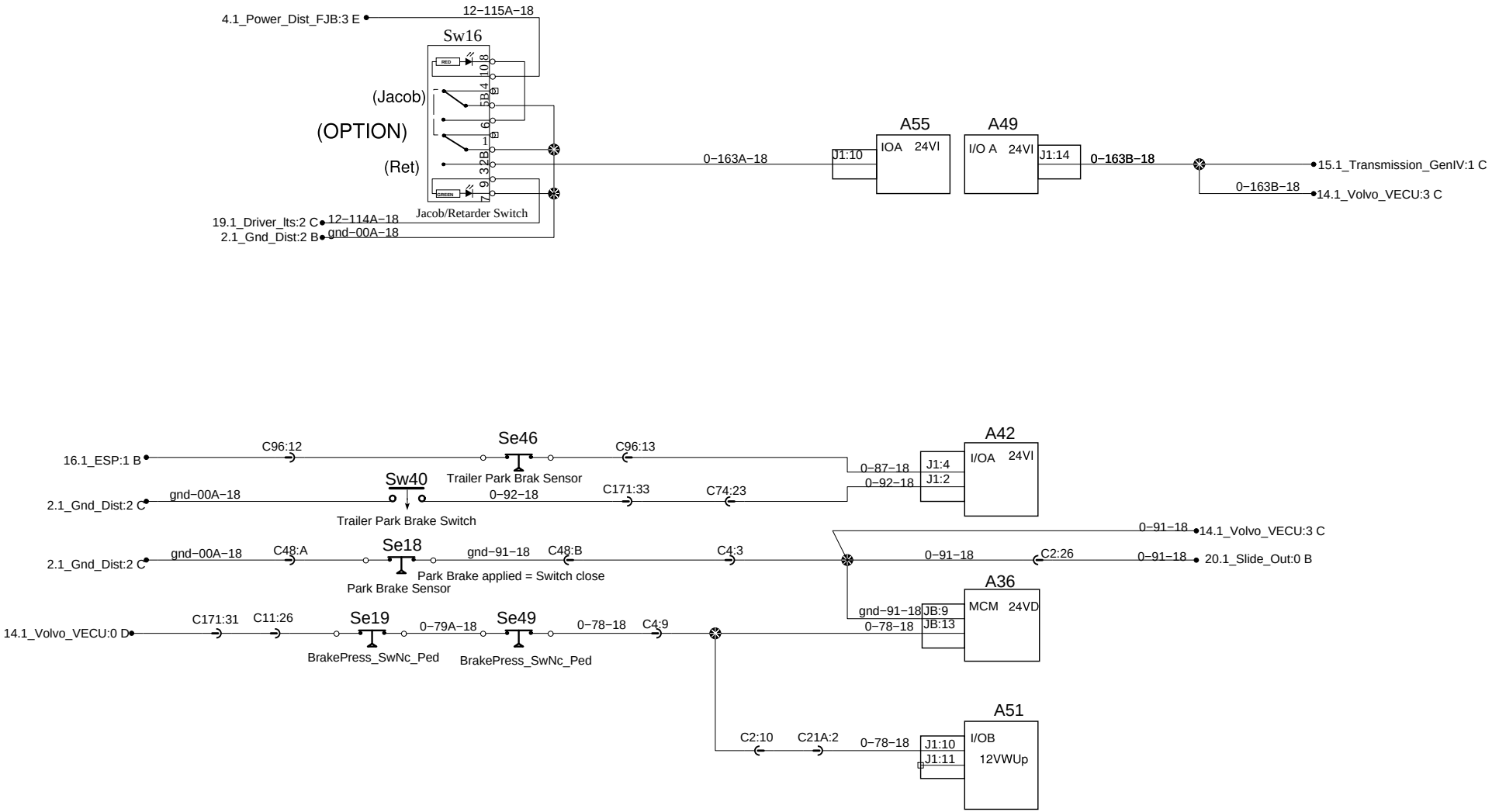

Brake, Engine Brake and Retarder

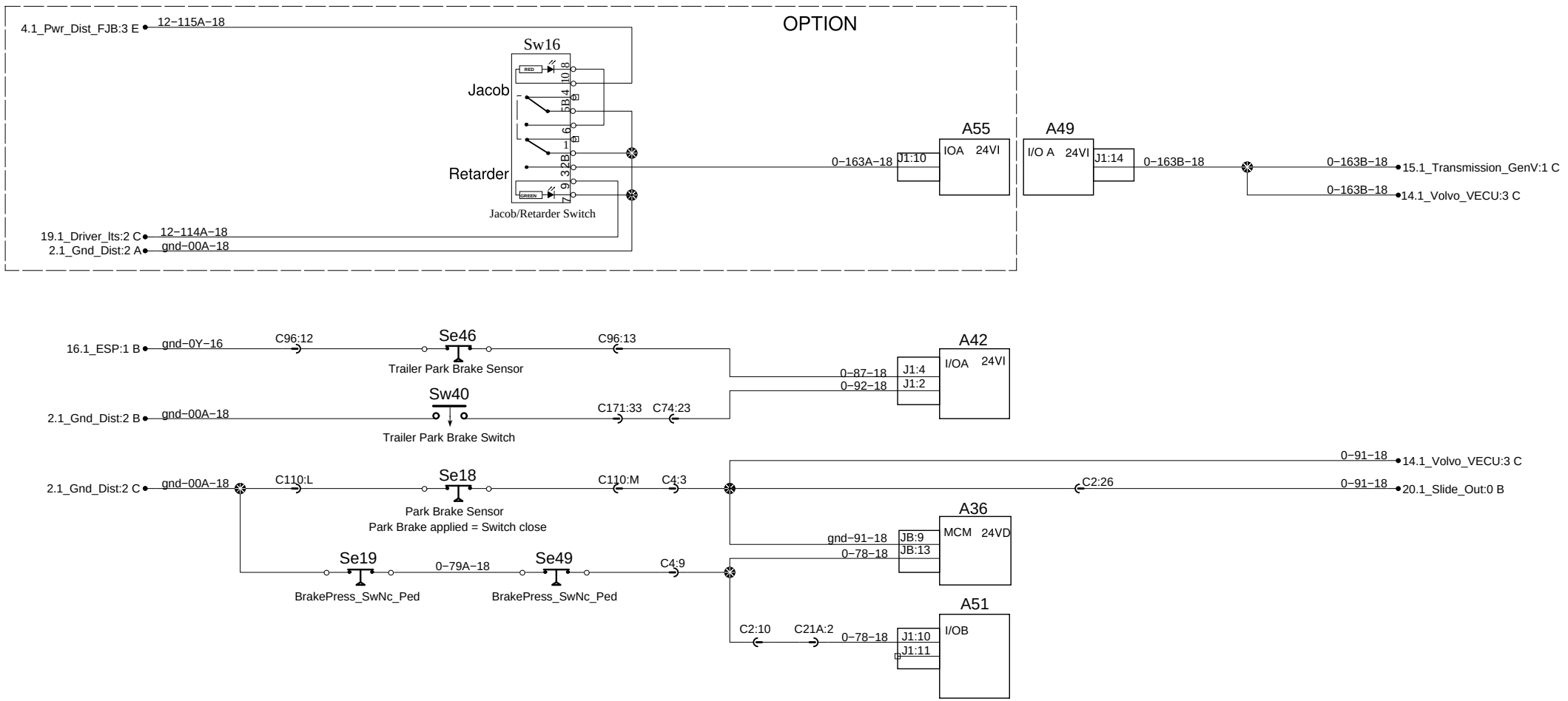

Brake, Engine Brake and Retarder

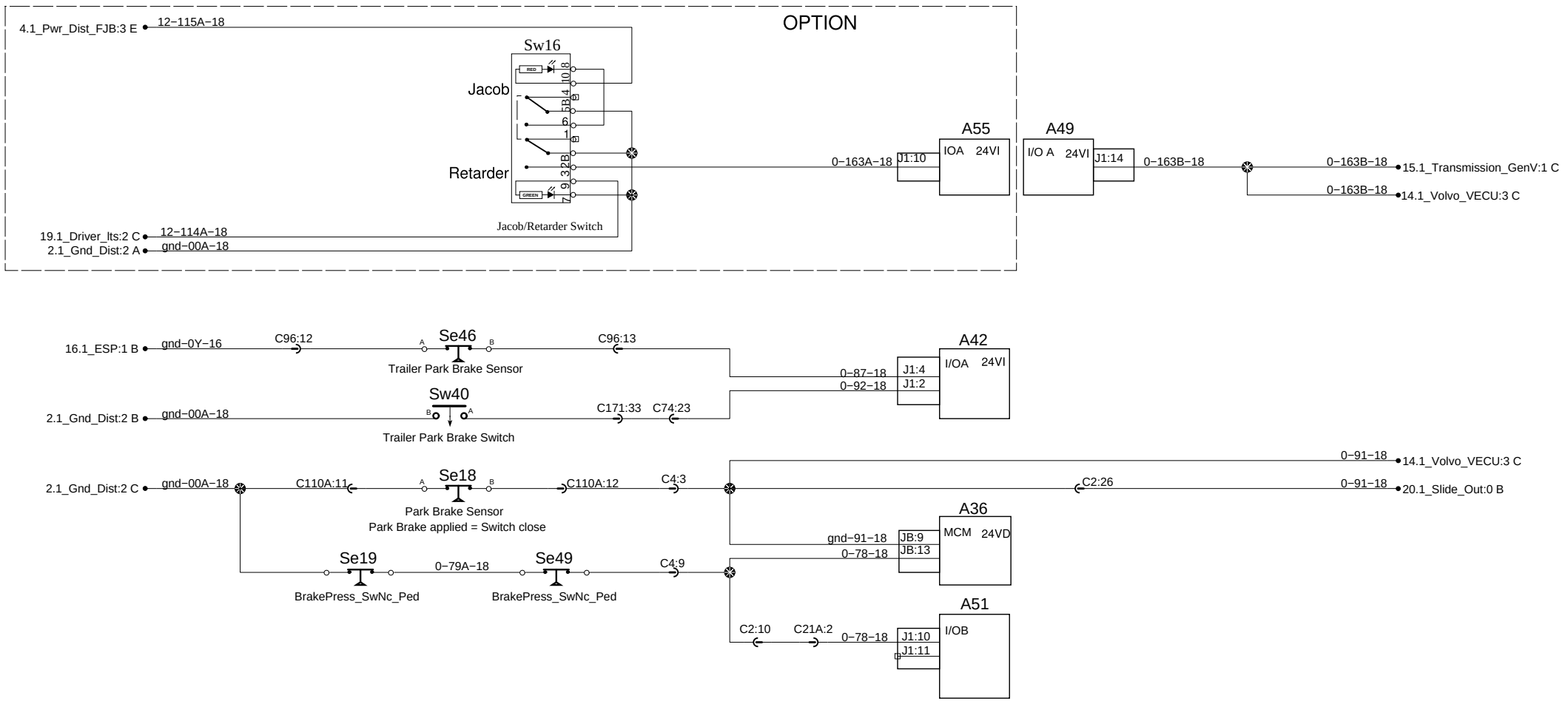

Fan Clutch

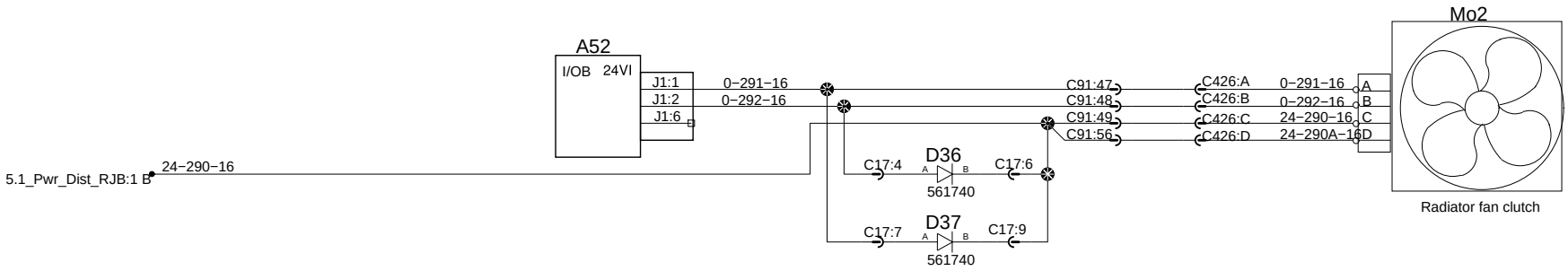

Preheater Fuel Filter

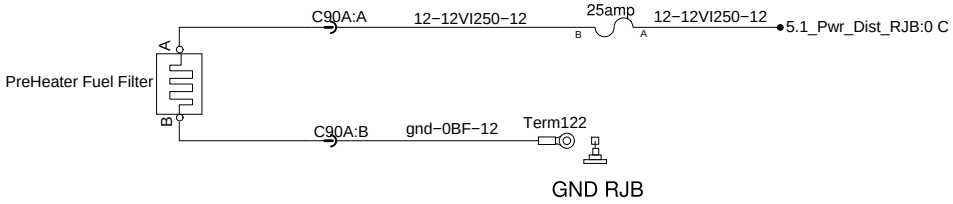

Engine ECU Volvo

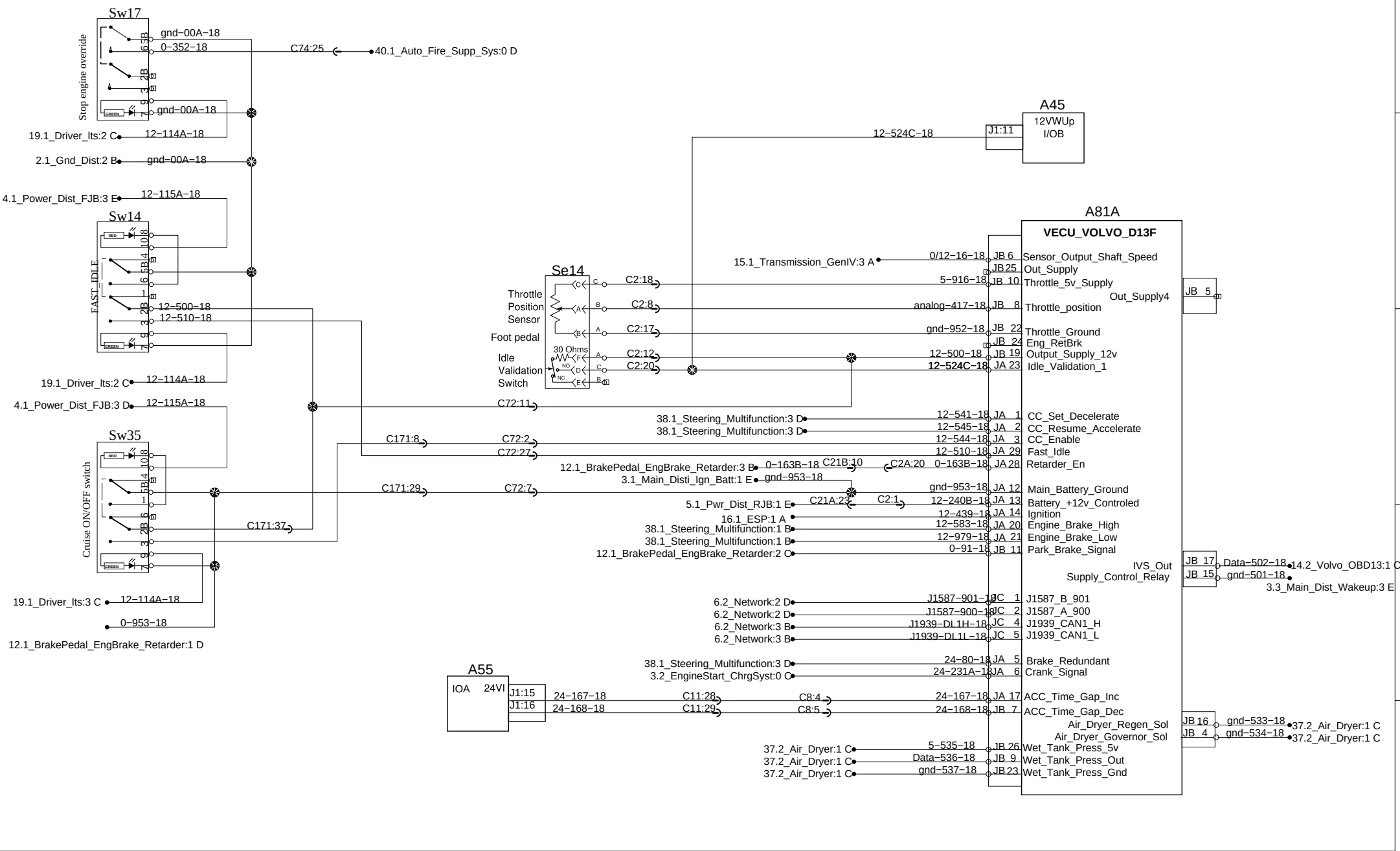

Engine ECU Volvo

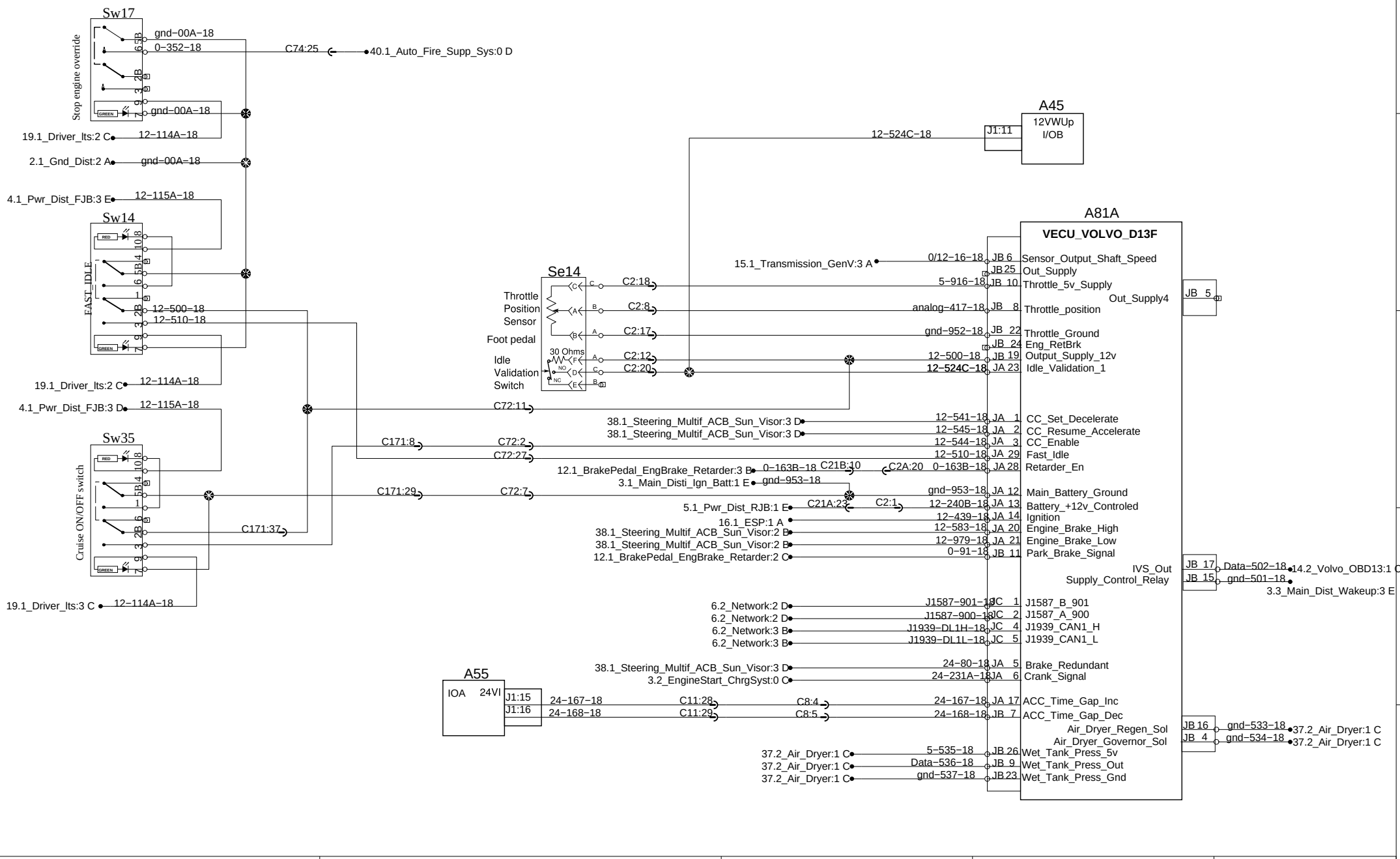

PREVOST®	WIRING DIAGRAM	No:D061360	Page:14.1	Rev:10

Volvo D13 Engine Ecu

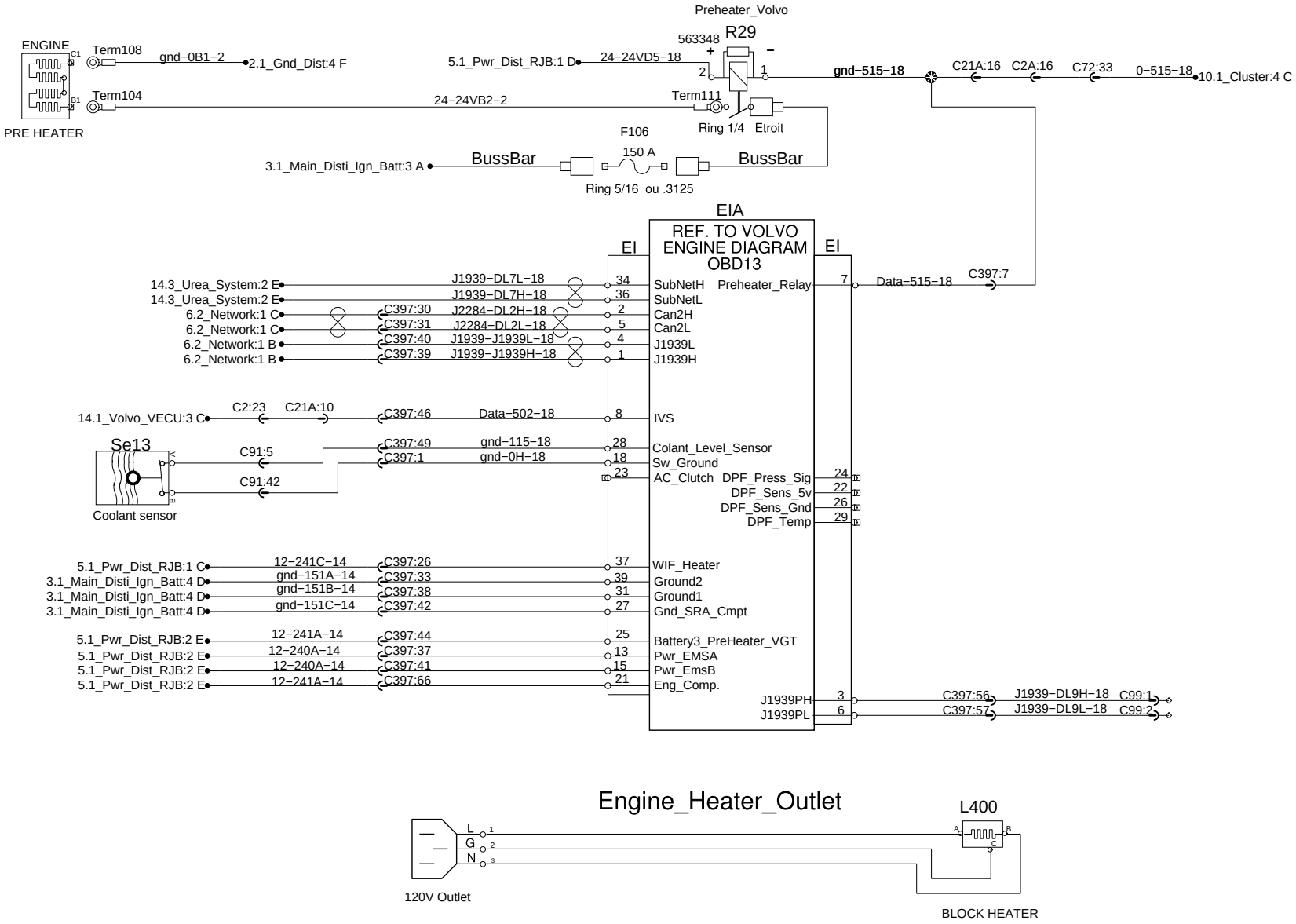

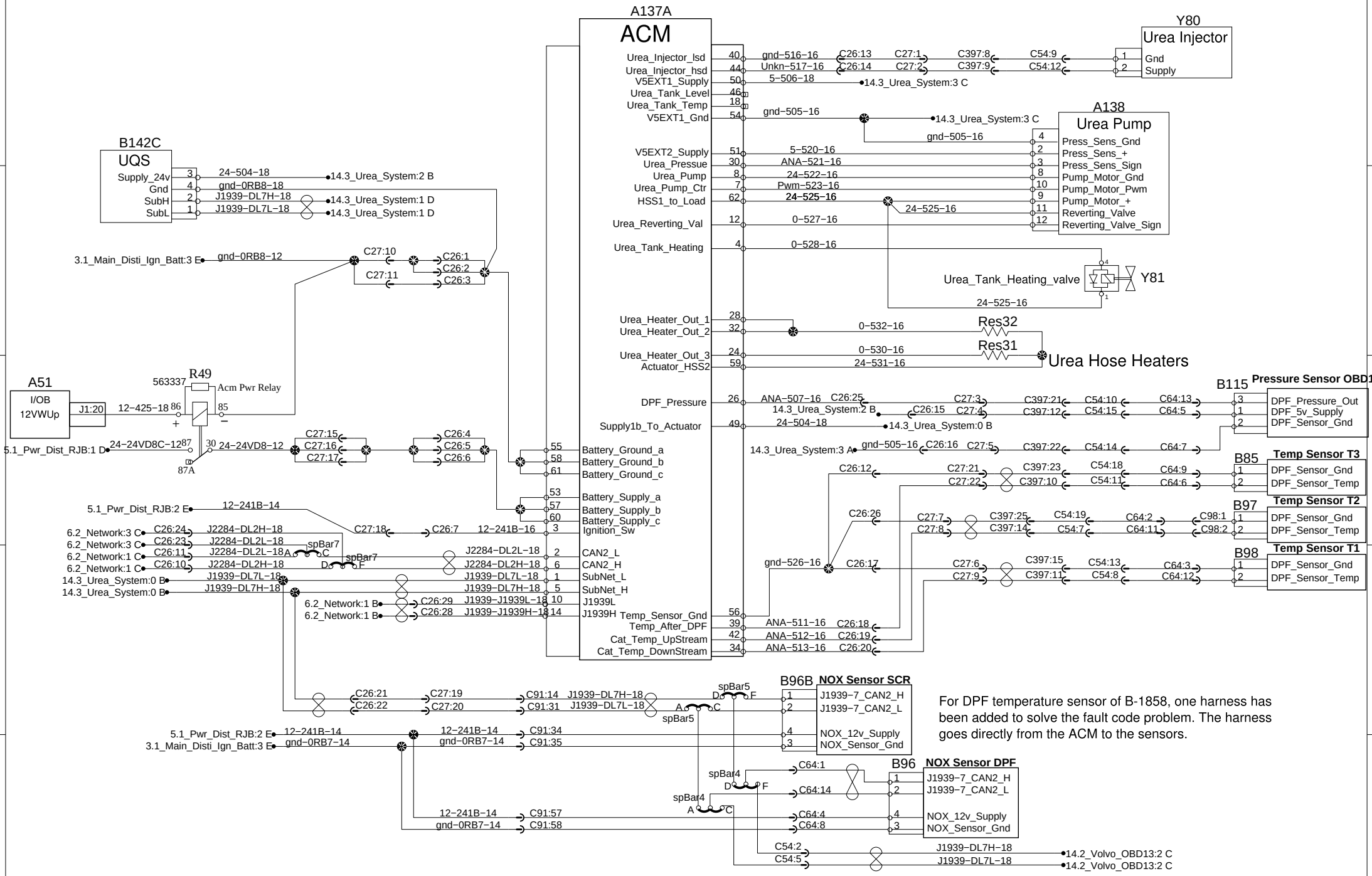

For DPF temperature sensor of B-1858, one harness has been added to solve the fault code problem. The harness goes directly from the ACM to the sensors.

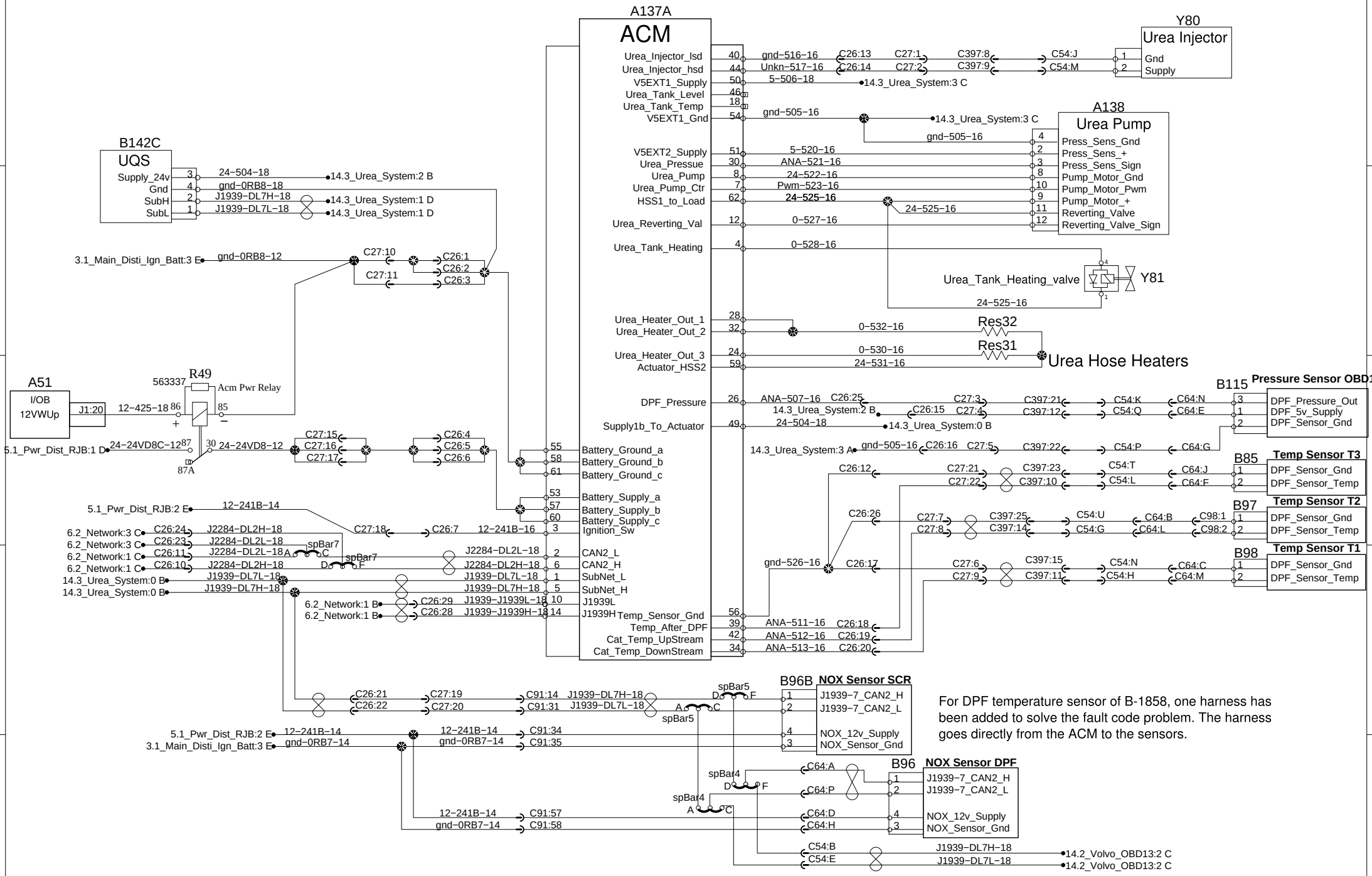
A137A
ACM
Urea_Injector_lsd
Urea_Injector_hsd
V5EXT1_Supply
Urea_Tank_Level
Urea_Tank_Temp
V5EXT1_Gnd
V5EXT2_Supply
Urea_Pressue
Urea_Pump
Urea_Pump_Ctr
HSS1_to_Load
Urea_Reverting_Val
Urea_Tank_Heating
Urea_Heater_Out_1
Urea_Heater_Out_2
Urea_Heater_Out_3
Actuator_HSS2
DPF_Pressure
Supply1b_To_Actuator
Battery_Ground_a
Battery_Ground_b
Battery_Ground_c
Battery_Supply_a
Battery_Supply_b
Battery_Supply_c
Ignition_Sw
CAN2_L
CAN2_H
SubNet_L
SubNet_H
J1939L
J1939H
Temp_Sensor_Gnd
Temp_After_DPF
Cat_Temp_UpStream
Cat_Temp_DownStream
Y80
Urea Injector
Gnd
Supply
A138
Urea Pump
Press_Sens_Gnd
Press_Sens_+
Press_Sens_Sign
Pump_Motor_Gnd
Pump_Motor_Pwm
Pump_Motor_+
Reverting_Valve
Reverting_Valve_Sign
Y81
Urea_Tank_Heating_valve
Res32
Res31
Urea Hose Heaters
B142C
UQS
Supply_24v
Gnd
SubH
SubL
A51
I/OB
12VWUp
R49
Acm Pwr Relay
B115
Pressure Sensor OBD13
DPF_Pressure_Out
DPF_5v_Supply
DPF_Sensor_Gnd
B85
Temp Sensor T3
DPF_Sensor_Gnd
DPF_Sensor_Temp
B97
Temp Sensor T2
DPF_Sensor_Gnd
DPF_Sensor_Temp
B98
Temp Sensor T1
DPF_Sensor_Gnd
DPF_Sensor_Temp
B96B
NOX Sensor SCR
J1939-7_CAN2_H
J1939-7_CAN2_L
NOX_12v_Supply
NOX_Sensor_Gnd
B96
NOX Sensor DPF
J1939-7_CAN2_H
J1939-7_CAN2_L
NOX_12v_Supply
NOX_Sensor_Gnd
For DPF temperature sensor of B-1858, one harness has been added to solve the fault code problem. The harness goes directly from the ACM to the sensors.

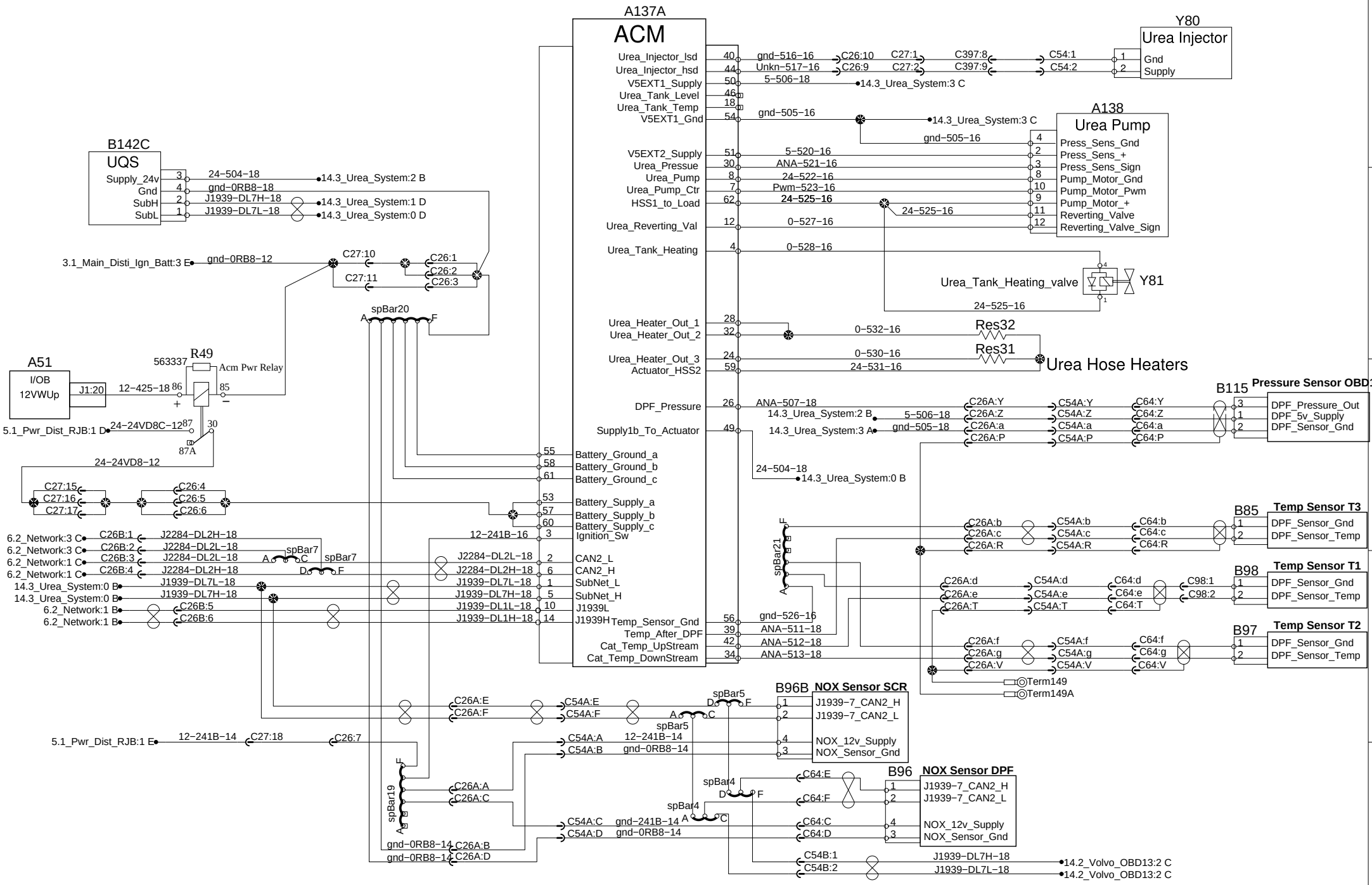

PREVOST®

WIRING DIAGRAM

No:D061360

Page:14.3

Rev:3

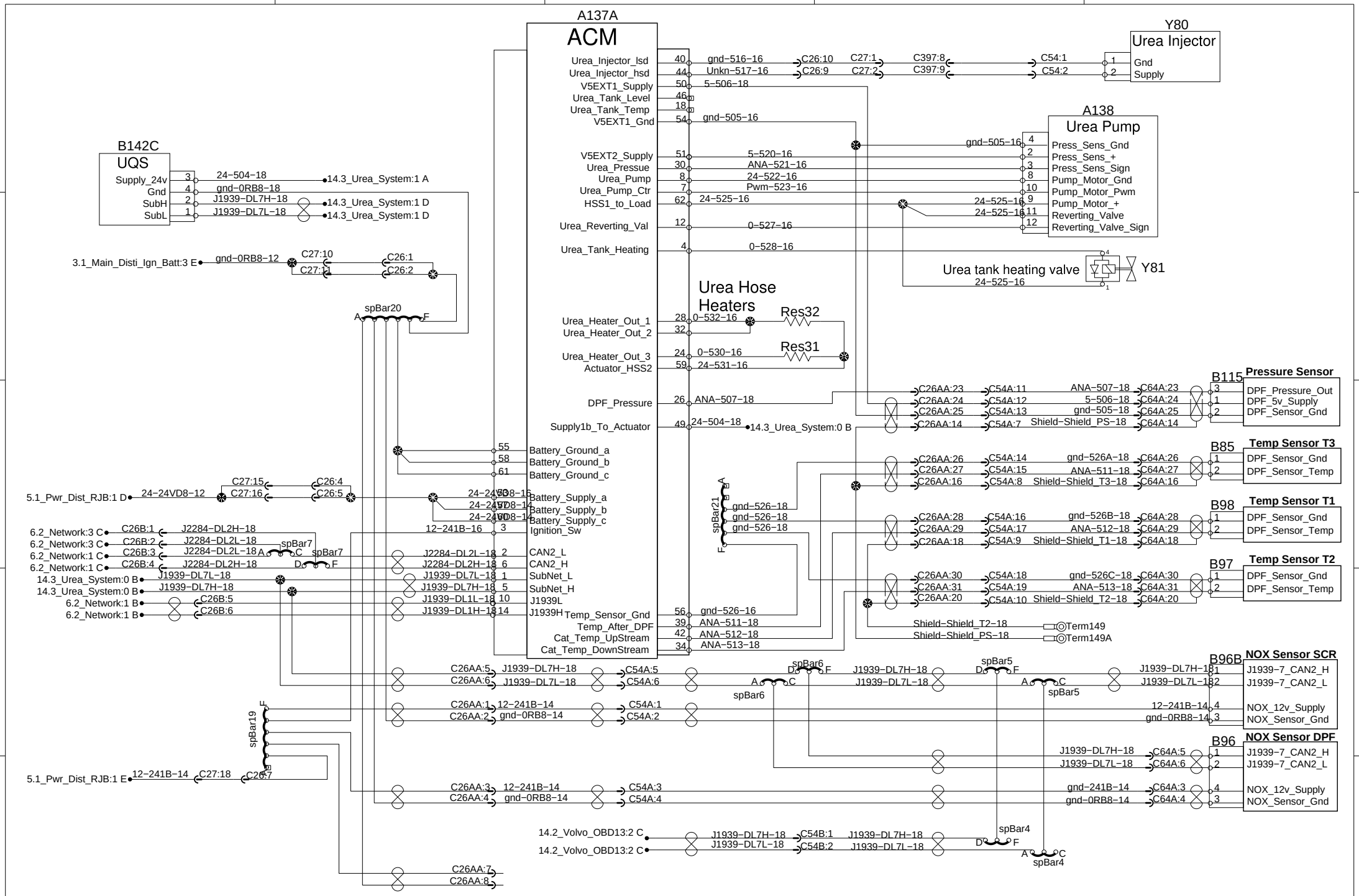
A137A
ACM
Urea_Injector_lsd
Urea_Injector_hsd
V5EXT1_Supply
Urea_Tank_Level
Urea_Tank_Temp
V5EXT1_Gnd
V5EXT2_Supply
Urea_Pressue
Urea_Pump
Urea_Pump_Ctr
HSS1_to_Load
Urea_Reverting_Val
Urea_Tank_Heating
Urea_Heater_Out_1
Urea_Heater_Out_2
Urea_Heater_Out_3
Actuator_HSS2
DPF_Pressure
Supply1b_To_Actuator
Battery_Ground_a
Battery_Ground_b
Battery_Ground_c
Battery_Supply_a
Battery_Supply_b
Battery_Supply_c
Ignition_Sw
CAN2_L
CAN2_H
SubNet_L
SubNet_H
J1939L
J1939H
Temp_Sensor_Gnd
Temp_After_DPF
Cat_Temp_UpStream
Cat_Temp_DownStream
Y80
Urea Injector
Gnd
Supply
A138
Urea Pump
Press_Sens_Gnd
Press_Sens_+
Press_Sens_Sign
Pump_Motor_Gnd
Pump_Motor_Pwm
Pump_Motor_+
Reverting_Valve
Reverting_Valve_Sign
B142C
UQS
Supply_24v
Gnd
SubH
SubL
Urea tank heating valve
Y81
Urea Hose Heaters
Res32
Res31
B115
Pressure Sensor
DPF_Pressure_Out
DPF_5v_Supply
DPF_Sensor_Gnd
B85
Temp Sensor T3
B98
Temp Sensor T1
B97
Temp Sensor T2
B96B
NOX Sensor SCR
J1939-7_CAN2_H
J1939-7_CAN2_L
NOX_12v_Supply
NOX_Sensor_Gnd
B96
NOX Sensor DPF
spBar20
spBar21
spBar19
spBar7
spBar6
spBar5
spBar4
Term149
Term149A

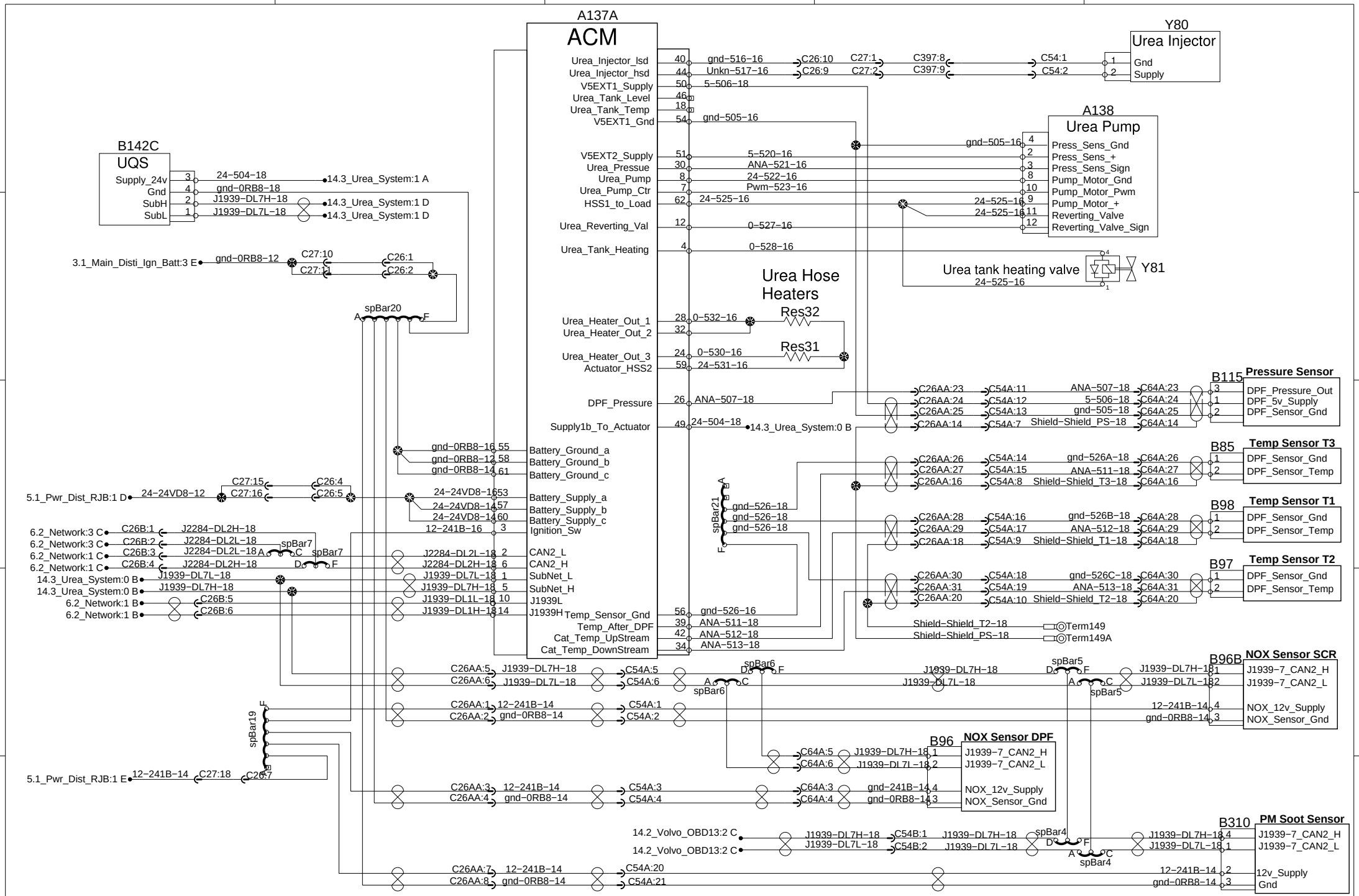
A137A
ACM
Urea_Injector_lsd 40
Urea_Injector_hsd 44
V5EXT1_Supply 50
Urea_Tank_Level 46
Urea_Tank_Temp 18
V5EXT1_Gnd 54
V5EXT2_Supply 51
Urea_Pressue 30
Urea_Pump 8
Urea_Pump_Ctr 7
HSS1_to_Load 62
Urea_Reverting_Val 12
Urea_Tank_Heating 4
Urea_Heater_Out_1 28
Urea_Heater_Out_2 32
Urea_Heater_Out_3 24
Actuator_HSS2 59
DPF_Pressure 26
Supply1b_To_Actuator 49
Battery_Ground_a 55
Battery_Ground_b 58
Battery_Ground_c 61
Battery_Supply_a 53
Battery_Supply_b 57
Battery_Supply_c 60
Ignition_Sw 3
CAN2_L 2
CAN2_H 6
SubNet_L 1
SubNet_H 5
J1939L 10
J1939H 14
Temp_Sensor_Gnd 56
Temp_After_DPF 39
Cat_Temp_UpStream 42
Cat_Temp_DownStream 34
gnd−516−16
Unkn−517−16
5−506−18
gnd−505−16
5−520−16
ANA−521−16
24−522−16
Pwm−523−16
24−525−16
0−527−16
0−528−16
0−532−16
0−530−16
24−531−16
ANA−507−18
24−504−18
gnd−526−18
ANA−511−18
ANA−512−18
ANA−513−18
C26:10
C26:9
C27:1
C27:2
C397:8
C397:9
C54:1
C54:2
Y80
Urea Injector
Gnd
Supply
A138
Urea Pump
Press_Sens_Gnd
Press_Sens_+
Press_Sens_Sign
Pump_Motor_Gnd
Pump_Motor_Pwm
Pump_Motor_+
Reverting_Valve
Reverting_Valve_Sign
Urea tank heating valve
Y81
Urea Hose Heaters
Res32
Res31
B142C
UQS
Supply_24v
Gnd
SubH
SubL
24−504−18
gnd−0RB8−18
J1939−DL7H−18
J1939−DL7L−18
14.3_Urea_System:1 A
14.3_Urea_System:1 D
14.3_Urea_System:1 D
3.1_Main_Disti_Ign_Batt:3 E
gnd−0RB8−12
C27:10
C27:1
C26:1
C26:2
spBar20
5.1_Pwr_Dist_RJB:1 D
24−24VD8−12
C27:15
C27:16
C26:4
C26:5
24−24VD8−16
24−24VD8−14
24−24VD8−14
12−241B−16
6.2_Network:3 C
6.2_Network:3 C
6.2_Network:1 C
6.2_Network:1 C
14.3_Urea_System:0 B
14.3_Urea_System:0 B
6.2_Network:1 B
6.2_Network:1 B
C26B:1
C26B:2
C26B:3
C26B:4
J2284−DL2H−18
J2284−DL2L−18
J2284−DL2L−18
J2284−DL2H−18
J1939−DL7L−18
J1939−DL7H−18
C26B:5
C26B:6
spBar7
spBar7
J2284−DL2L−18
J2284−DL2H−18
J1939−DL7L−18
J1939−DL7H−18
J1939−DL1L−18
J1939−DL1H−18
spBar21
gnd−526−18
gnd−526−18
gnd−526−18
B115
Pressure Sensor
DPF_Pressure_Out
DPF_5v_Supply
DPF_Sensor_Gnd
C26AA:23
C26AA:24
C26AA:25
C26AA:14
C54A:11
C54A:12
C54A:13
C54A:7
ANA−507−18
5−506−18
gnd−505−18
Shield−Shield_PS−18
C64A:23
C64A:24
C64A:25
C64A:14
B85
Temp Sensor T3
DPF_Sensor_Gnd
DPF_Sensor_Temp
C26AA:26
C26AA:27
C26AA:16
C54A:14
C54A:15
C54A:8
gnd−526A−18
ANA−511−18
Shield−Shield_T3−18
C64A:26
C64A:27
C64A:16
B98
Temp Sensor T1
DPF_Sensor_Gnd
DPF_Sensor_Temp
C26AA:28
C26AA:29
C26AA:18
C54A:16
C54A:17
C54A:9
gnd−526B−18
ANA−512−18
Shield−Shield_T1−18
C64A:28
C64A:29
C64A:18
B97
Temp Sensor T2
DPF_Sensor_Gnd
DPF_Sensor_Temp
C26AA:30
C26AA:31
C26AA:20
C54A:18
C54A:19
C54A:10
gnd−526C−18
ANA−513−18
Shield−Shield_T2−18
C64A:30
C64A:31
C64A:20
Shield−Shield_T2−18
Shield−Shield_PS−18
Term149
Term149A
B96B
NOX Sensor SCR
J1939−7_CAN2_H
J1939−7_CAN2_L
NOX_12v_Supply
NOX_Sensor_Gnd
C26AA:5
C26AA:6
C26AA:1
C26AA:2
J1939−DL7H−18
J1939−DL7L−18
12−241B−14
gnd−0RB8−14
C54A:5
C54A:6
C54A:1
C54A:2
spBar6
spBar5
spBar19
B96
NOX Sensor DPF
J1939−7_CAN2_H
J1939−7_CAN2_L
NOX_12v_Supply
NOX_Sensor_Gnd
C64A:5
C64A:6
C64A:3
C64A:4
gnd−241B−14
gnd−0RB8−14
5.1_Pwr_Dist_RJB:1 E
12−241B−14
C27:18
C26:7
C26AA:3
C26AA:4
C54A:3
C54A:4
14.2_Volvo_OBD13:2 C
14.2_Volvo_OBD13:2 C
J1939−DL7H−18
J1939−DL7L−18
C54B:1
C54B:2
spBar4
B310
PM Soot Sensor
J1939−7_CAN2_H
J1939−7_CAN2_L
12v_Supply
Gnd
C26AA:7
C26AA:8
C54A:20
C54A:21
PREVOST®
WIRING DIAGRAM
No:D061360
Page:14.3
Rev:15

Transmission Allison Gen 4

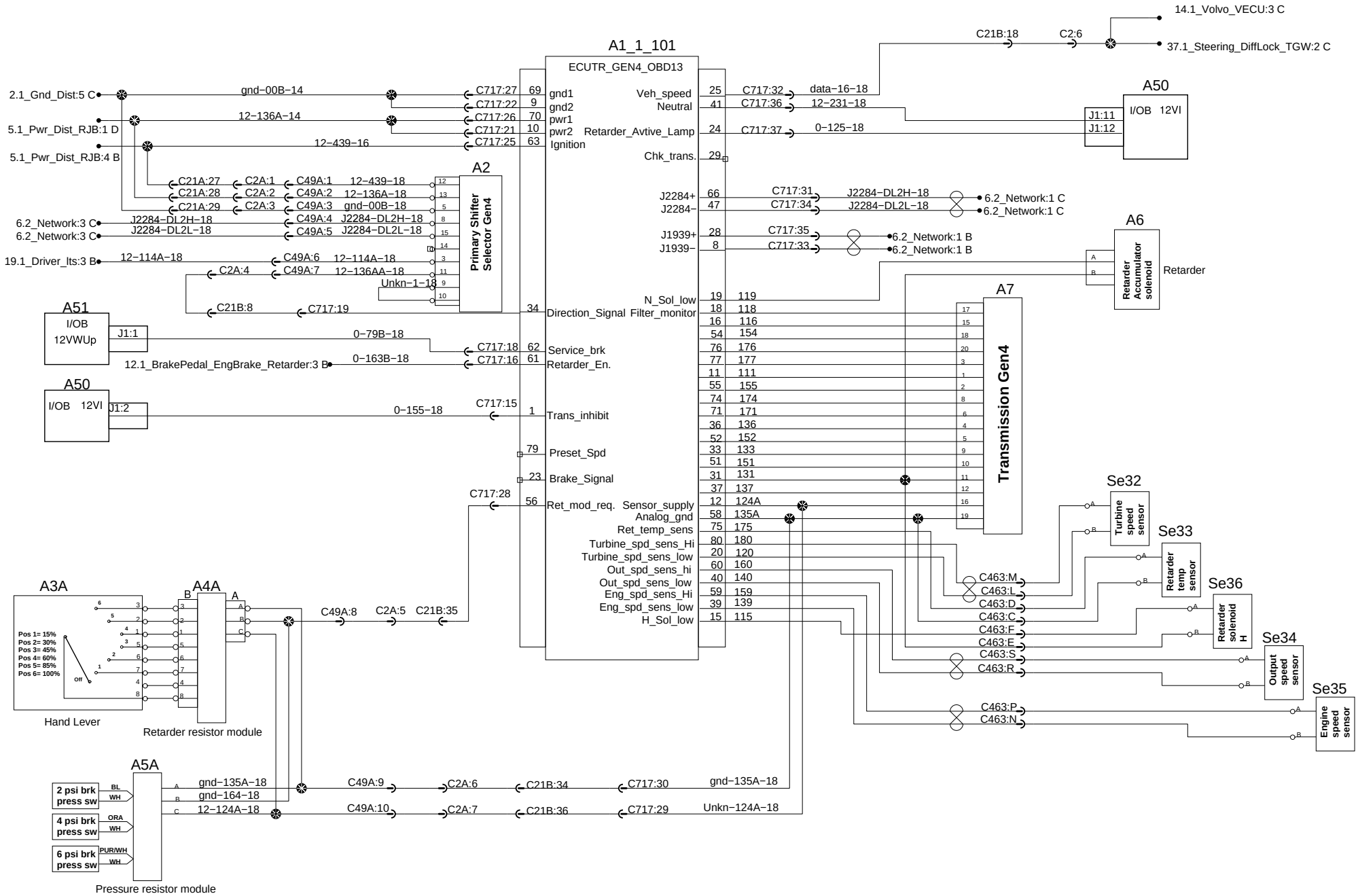

Transmission Allison Gen 5

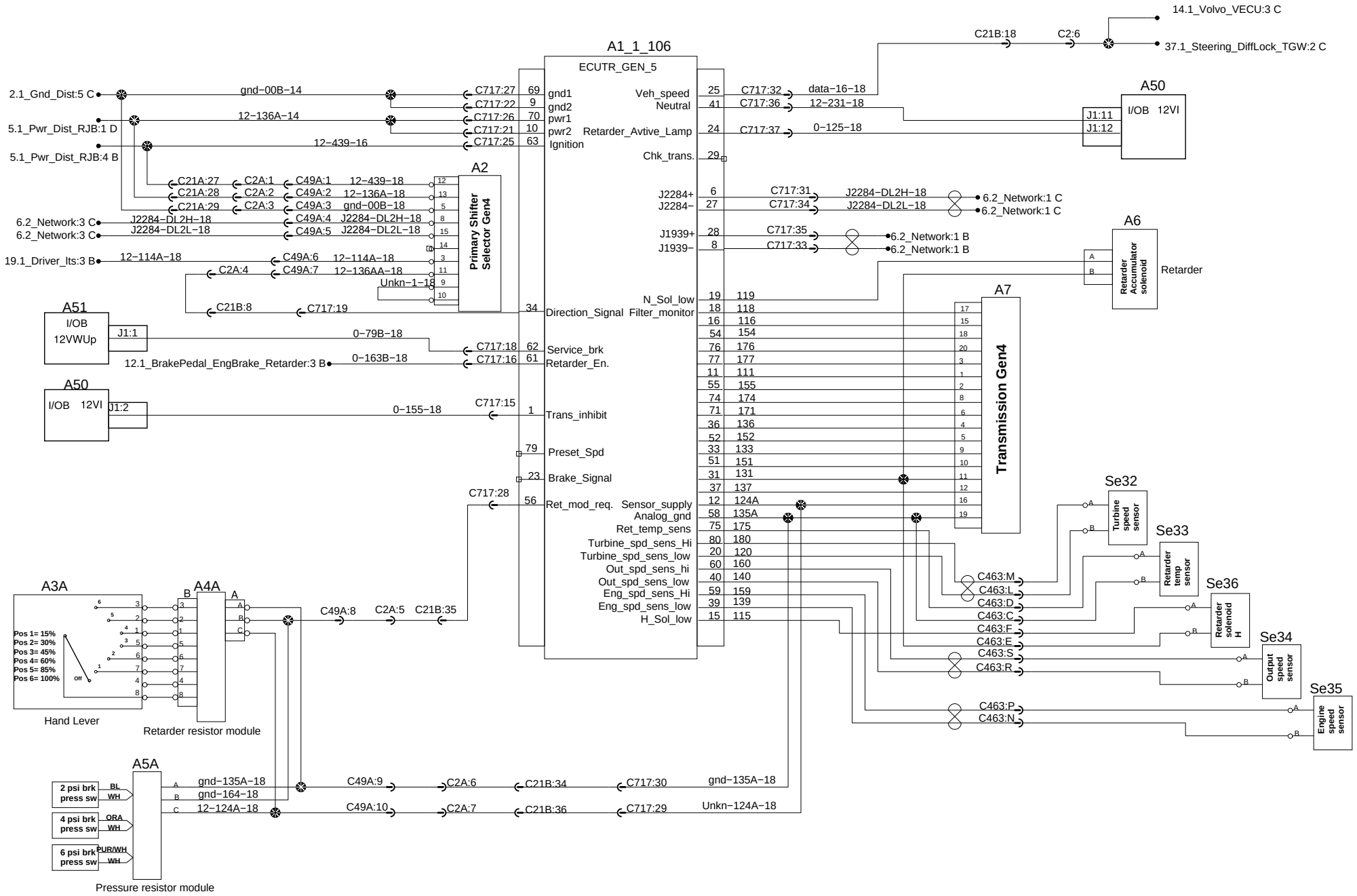

Transmission Allison Gen 5

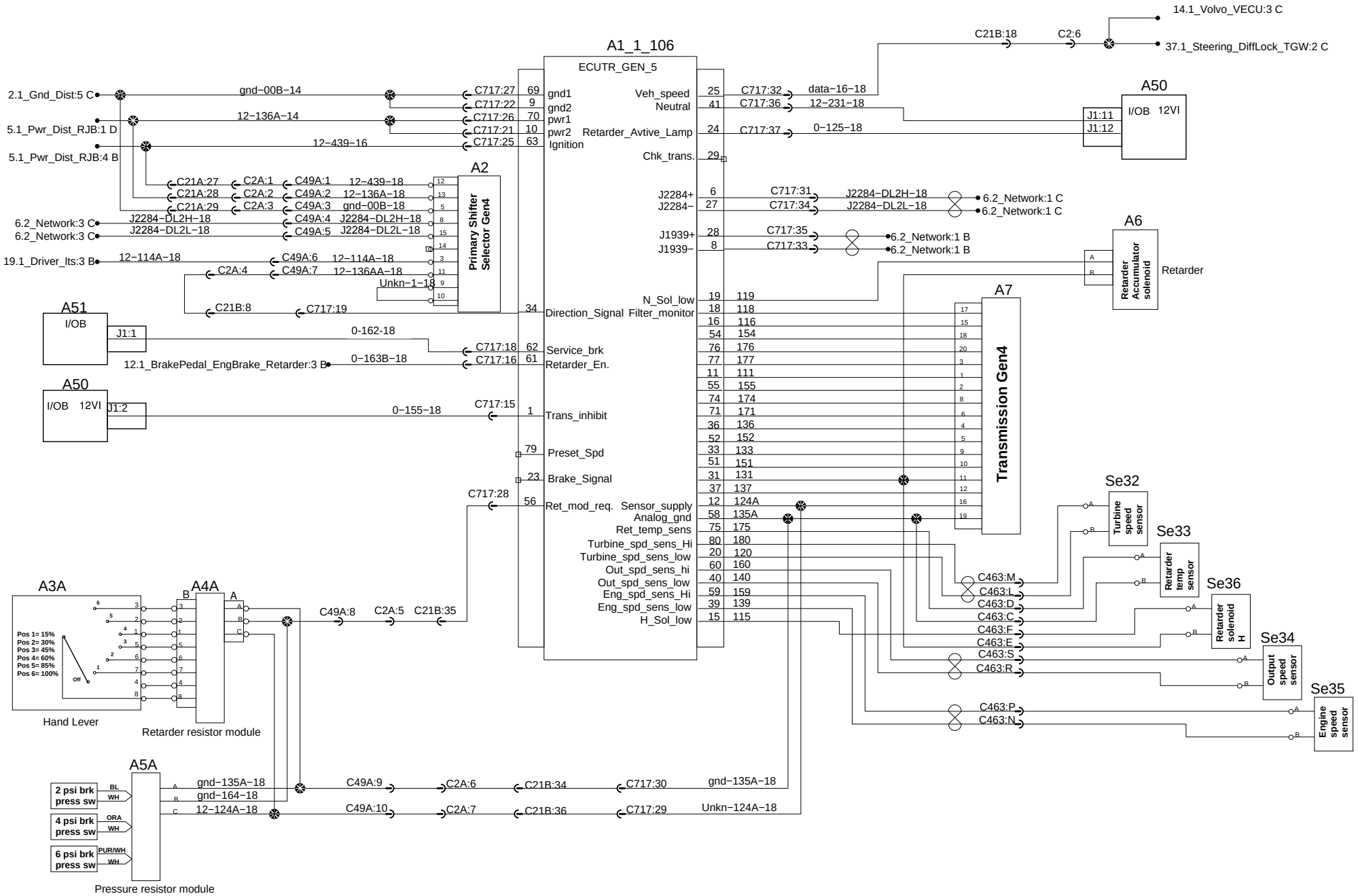

PREVOST®	WIRING DIAGRAM	No:D061360	Page:15.1	Rev: 09

Transmission Allison Gen 5

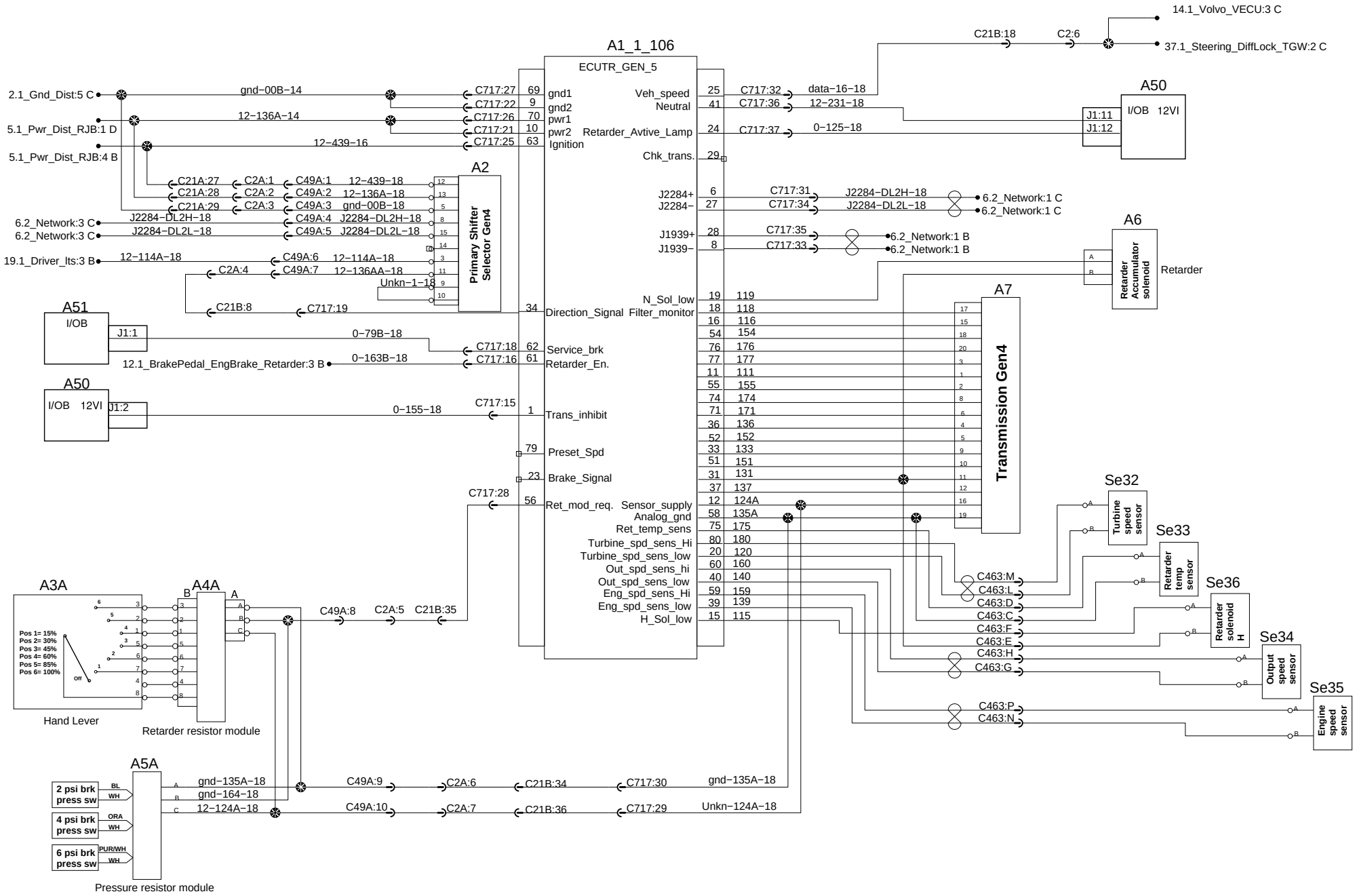

PREVOST®	WIRING DIAGRAM	No:D061360	Page:15.1	Rev:13−1

ESP

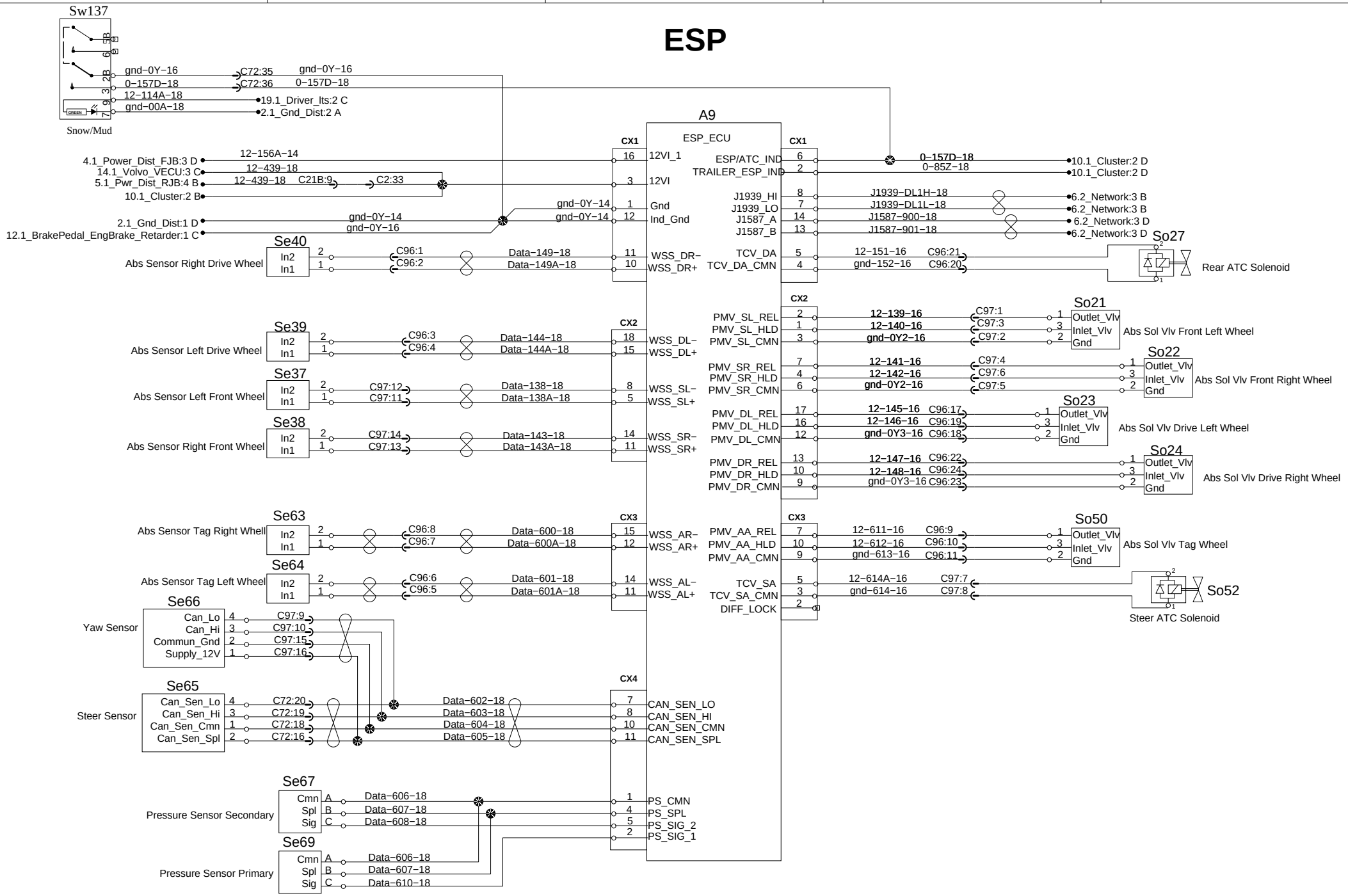
Sw137
Snow/Mud
gnd−0Y−16
0−157D−18
12−114A−18
gnd−00A−18
C72:35
C72:36
19.1_Driver_lts:2 C
2.1_Gnd_Dist:2 A
A9
ESP_ECU
CX1
CX2
CX3
CX4
4.1_Power_Dist_FJB:3 D
14.1_Volvo_VECU:3 C
5.1_Pwr_Dist_RJB:4 B
10.1_Cluster:2 B
2.1_Gnd_Dist:1 D
12.1_BrakePedal_EngBrake_Retarder:1 C
12−156A−14
12−439−18
C21B:9
C2:33
12VI_1
12VI
Gnd
Ind_Gnd
ESP/ATC_IND
TRAILER_ESP_IND
J1939_HI
J1939_LO
J1587_A
J1587_B
TCV_DA
TCV_DA_CMN
0−157D−18
0−85Z−18
J1939−DL1H−18
J1939−DL1L−18
J1587−900−18
J1587−901−18
10.1_Cluster:2 D
6.2_Network:3 B
6.2_Network:3 D
Se40
Abs Sensor Right Drive Wheel
C96:1
C96:2
Data−149−18
Data−149A−18
WSS_DR−
WSS_DR+
12−151−16
gnd−152−16
C96:21
C96:20
So27
Rear ATC Solenoid
Se39
Abs Sensor Left Drive Wheel
Se37
Abs Sensor Left Front Wheel
Se38
Abs Sensor Right Front Wheel
C96:3
C96:4
C97:12
C97:11
C97:14
C97:13
Data−144−18
Data−144A−18
Data−138−18
Data−138A−18
Data−143−18
Data−143A−18
WSS_DL−
WSS_DL+
WSS_SL−
WSS_SL+
WSS_SR−
WSS_SR+
PMV_SL_REL
PMV_SL_HLD
PMV_SL_CMN
PMV_SR_REL
PMV_SR_HLD
PMV_SR_CMN
PMV_DL_REL
PMV_DL_HLD
PMV_DL_CMN
PMV_DR_REL
PMV_DR_HLD
PMV_DR_CMN
12−139−16
12−140−16
gnd−0Y2−16
12−141−16
12−142−16
12−145−16
12−146−16
gnd−0Y3−16
12−147−16
12−148−16
C97:1
C97:3
C97:2
C97:4
C97:6
C97:5
C96:17
C96:19
C96:18
C96:22
C96:24
C96:23
So21
So22
So23
So24
Outlet_Vlv
Inlet_Vlv
Gnd
Abs Sol Vlv Front Left Wheel
Abs Sol Vlv Front Right Wheel
Abs Sol Vlv Drive Left Wheel
Abs Sol Vlv Drive Right Wheel
Se63
Abs Sensor Tag Right Whell
Se64
Abs Sensor Tag Left Wheel
C96:8
C96:7
C96:6
C96:5
Data−600−18
Data−600A−18
Data−601−18
Data−601A−18
WSS_AR−
WSS_AR+
WSS_AL−
WSS_AL+
PMV_AA_REL
PMV_AA_HLD
PMV_AA_CMN
TCV_SA
TCV_SA_CMN
DIFF_LOCK
12−611−16
12−612−16
gnd−613−16
12−614A−16
gnd−614−16
C96:9
C96:10
C96:11
C97:7
C97:8
So50
So52
Abs Sol Vlv Tag Wheel
Steer ATC Solenoid
Se66
Yaw Sensor
Can_Lo
Can_Hi
Commun_Gnd
Supply_12V
C97:9
C97:10
C97:15
C97:16
Se65
Steer Sensor
Can_Sen_Lo
Can_Sen_Hi
Can_Sen_Cmn
Can_Sen_Spl
C72:20
C72:19
C72:18
C72:16
Data−602−18
Data−603−18
Data−604−18
Data−605−18
CAN_SEN_LO
CAN_SEN_HI
CAN_SEN_CMN
CAN_SEN_SPL
Se67
Pressure Sensor Secondary
Se69
Pressure Sensor Primary
Cmn
Spl
Sig
Data−606−18
Data−607−18
Data−608−18
Data−610−18
PS_CMN
PS_SPL
PS_SIG_2
PS_SIG_1

ESP

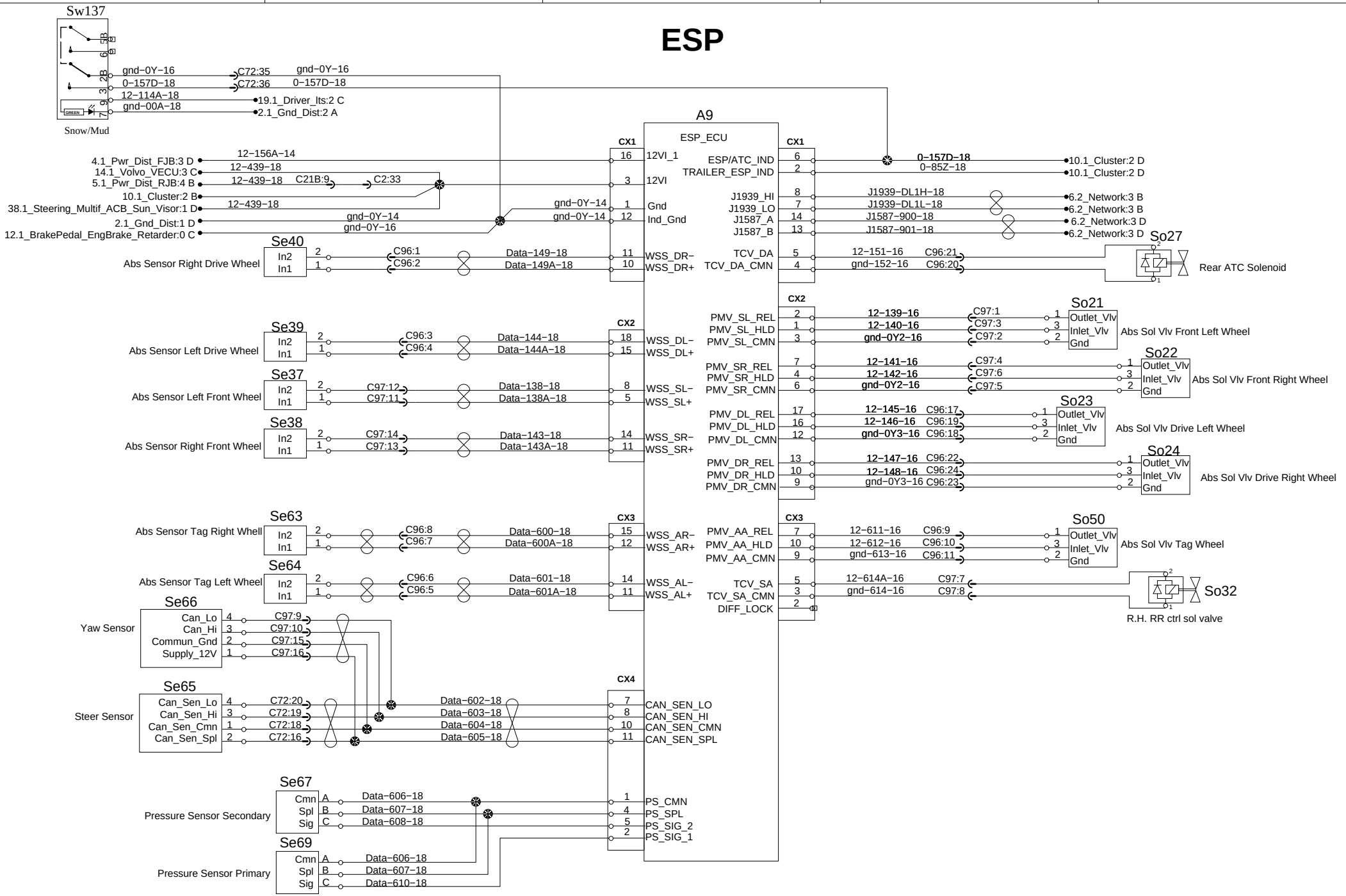
Sw137
Snow/Mud
gnd−0Y−16
0−157D−18
12−114A−18
gnd−00A−18
C72:35
C72:36
19.1_Driver_lts:2 C
2.1_Gnd_Dist:2 A
A9
ESP_ECU
CX1
CX2
CX3
CX4
4.1_Pwr_Dist_FJB:3 D
14.1_Volvo_VECU:3 C
5.1_Pwr_Dist_RJB:4 B
10.1_Cluster:2 B
38.1_Steering_Multif_ACB_Sun_Visor:1 D
2.1_Gnd_Dist:1 D
12.1_BrakePedal_EngBrake_Retarder:0 C
12−156A−14
12−439−18
C21B:9
C2:33
12VI_1
12VI
Gnd
Ind_Gnd
ESP/ATC_IND
TRAILER_ESP_IND
J1939_HI
J1939_LO
J1587_A
J1587_B
TCV_DA
TCV_DA_CMN
10.1_Cluster:2 D
6.2_Network:3 B
6.2_Network:3 D
Se40
Abs Sensor Right Drive Wheel
C96:1
C96:2
Data−149−18
Data−149A−18
WSS_DR−
WSS_DR+
So27
Rear ATC Solenoid
Se39
Abs Sensor Left Drive Wheel
Se37
Abs Sensor Left Front Wheel
Se38
Abs Sensor Right Front Wheel
WSS_DL−
WSS_DL+
WSS_SL−
WSS_SL+
WSS_SR−
WSS_SR+
PMV_SL_REL
PMV_SL_HLD
PMV_SL_CMN
PMV_SR_REL
PMV_SR_HLD
PMV_SR_CMN
PMV_DL_REL
PMV_DL_HLD
PMV_DL_CMN
PMV_DR_REL
PMV_DR_HLD
PMV_DR_CMN
So21
So22
So23
So24
Outlet_Vlv
Inlet_Vlv
Gnd
Abs Sol Vlv Front Left Wheel
Abs Sol Vlv Front Right Wheel
Abs Sol Vlv Drive Left Wheel
Abs Sol Vlv Drive Right Wheel
Se63
Abs Sensor Tag Right Whell
Se64
Abs Sensor Tag Left Wheel
WSS_AR−
WSS_AR+
WSS_AL−
WSS_AL+
PMV_AA_REL
PMV_AA_HLD
PMV_AA_CMN
TCV_SA
TCV_SA_CMN
DIFF_LOCK
So50
So32
Abs Sol Vlv Tag Wheel
R.H. RR ctrl sol valve
Se66
Yaw Sensor
Can_Lo
Can_Hi
Commun_Gnd
Supply_12V
Se65
Steer Sensor
Can_Sen_Lo
Can_Sen_Hi
Can_Sen_Cmn
Can_Sen_Spl
CAN_SEN_LO
CAN_SEN_HI
CAN_SEN_CMN
CAN_SEN_SPL
Se67
Pressure Sensor Secondary
Se69
Pressure Sensor Primary
Cmn
Spl
Sig
PS_CMN
PS_SPL
PS_SIG_2
PS_SIG_1

Hvac_Defroster

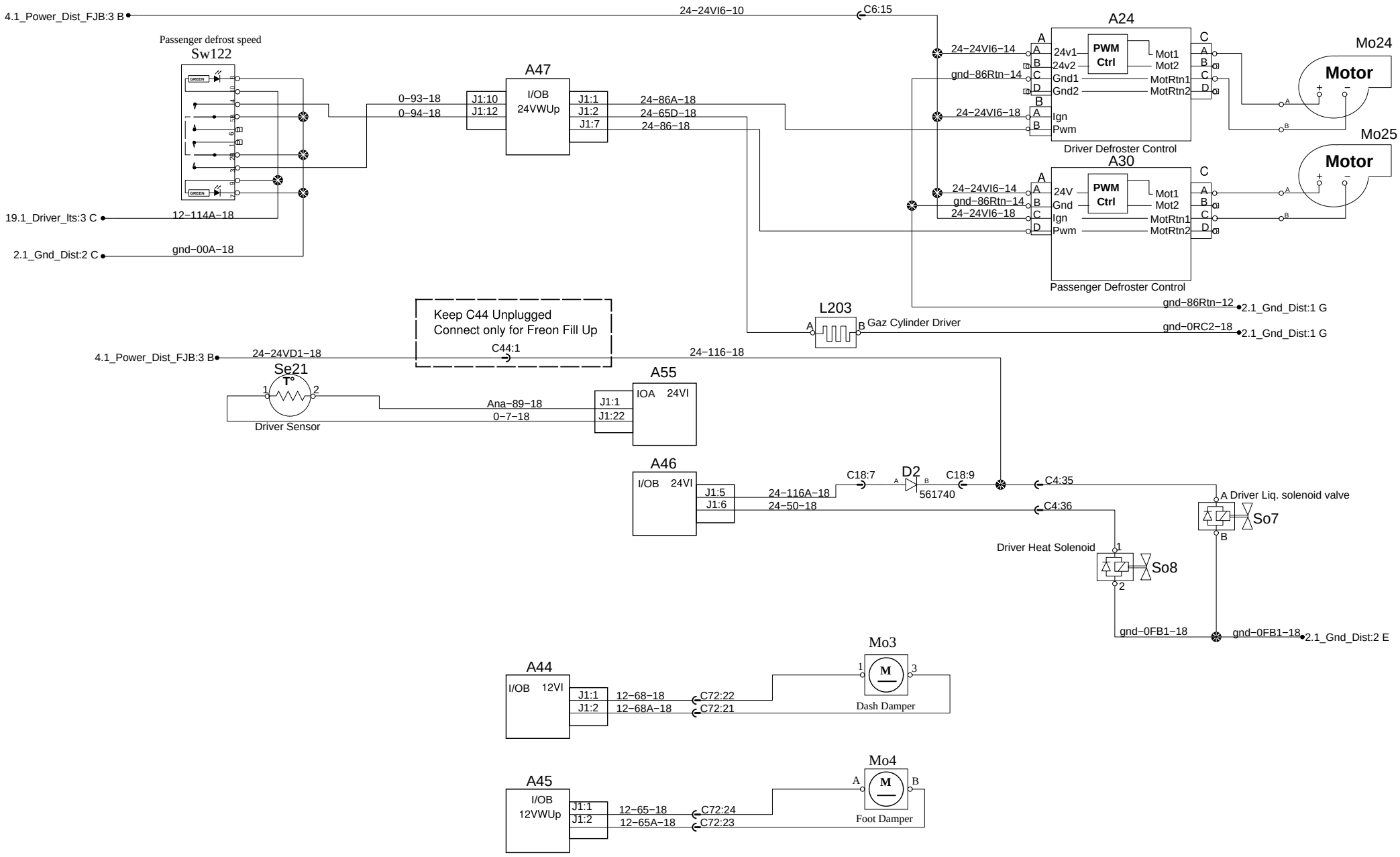

Hvac

Wiring identifiers

Full A/C only

Full and Small A/C

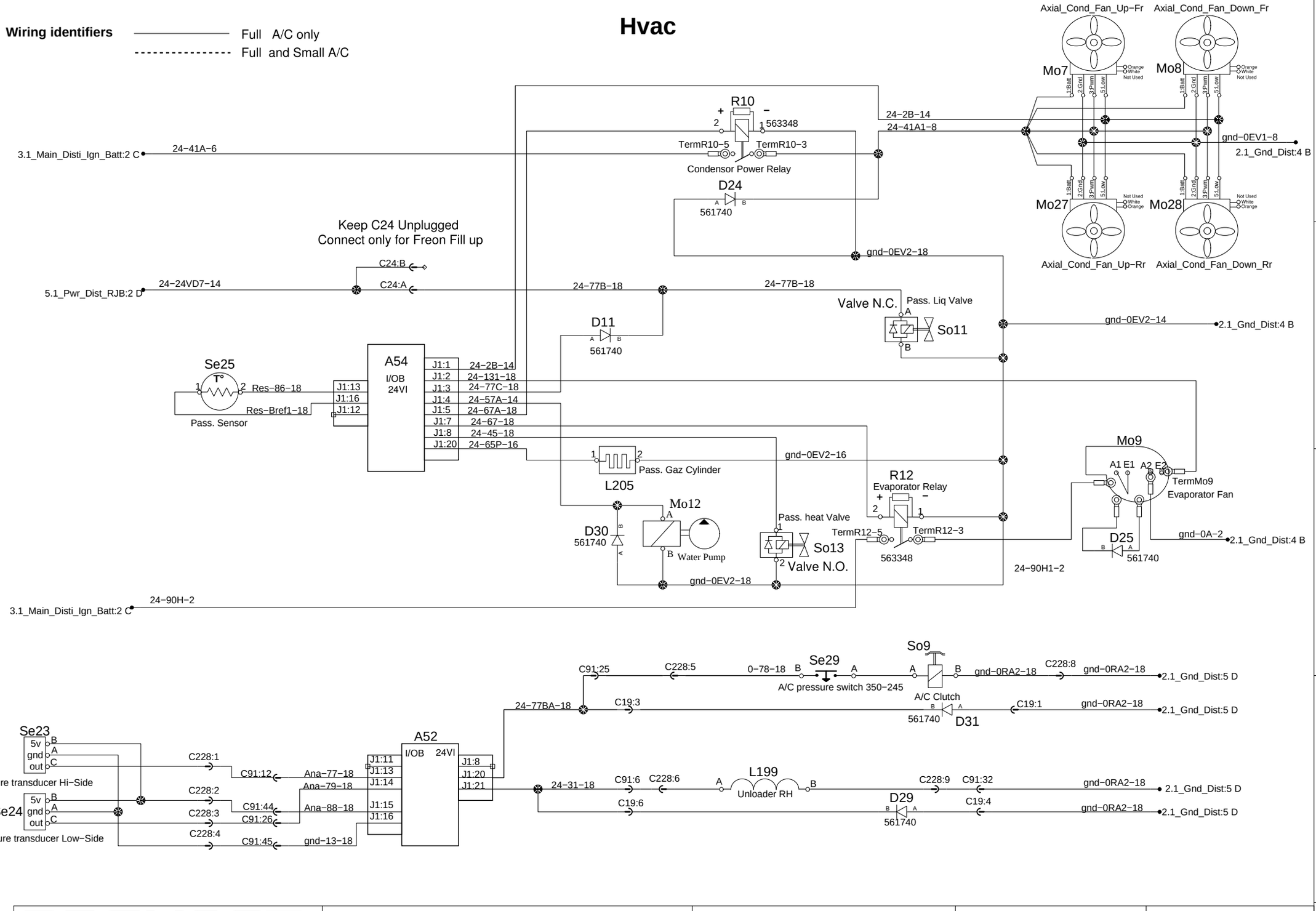

Hvac

Wiring identifiers —— Full A/C only
---------- Small A/C

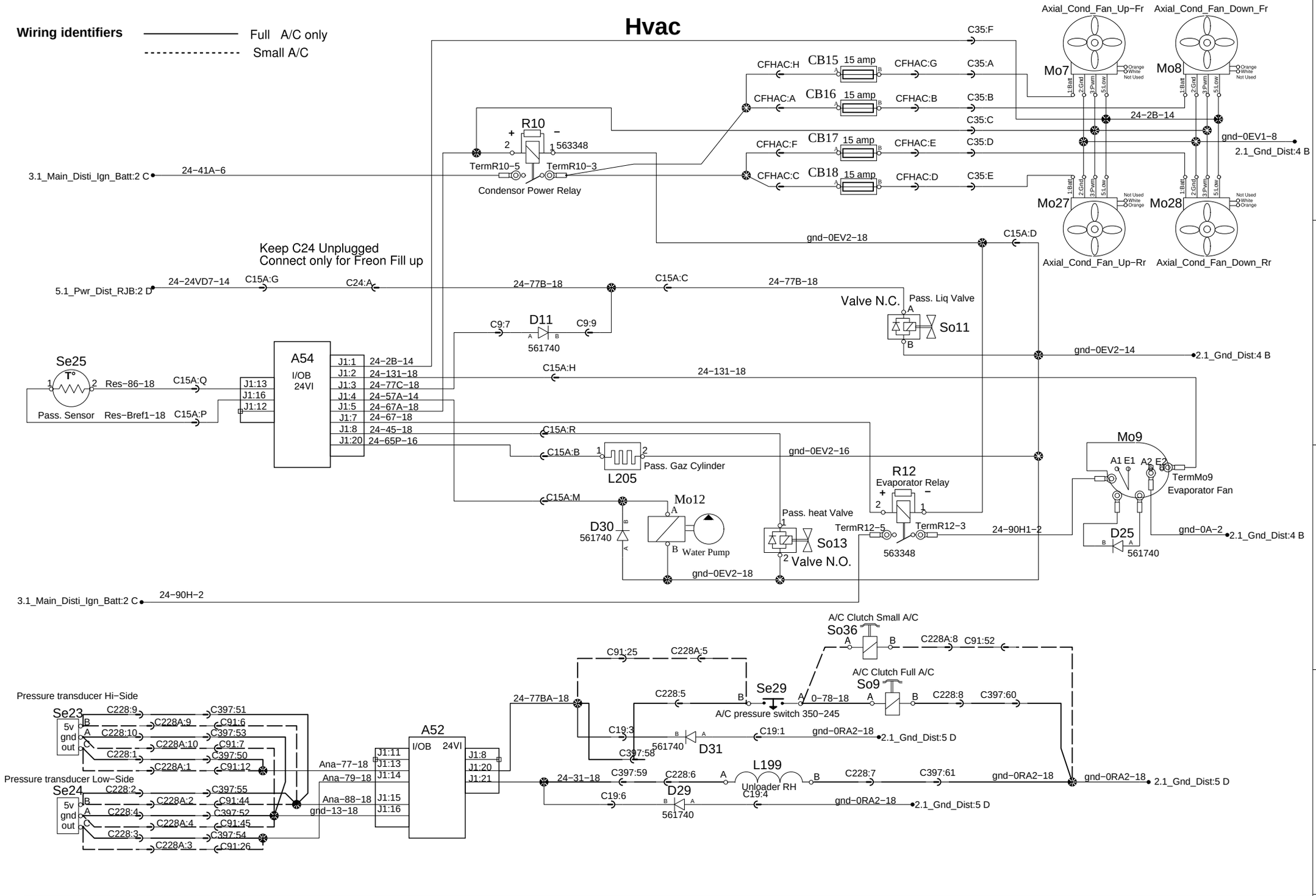

Hvac

Wiring identifiers —— Full A/C only
---------- Small A/C

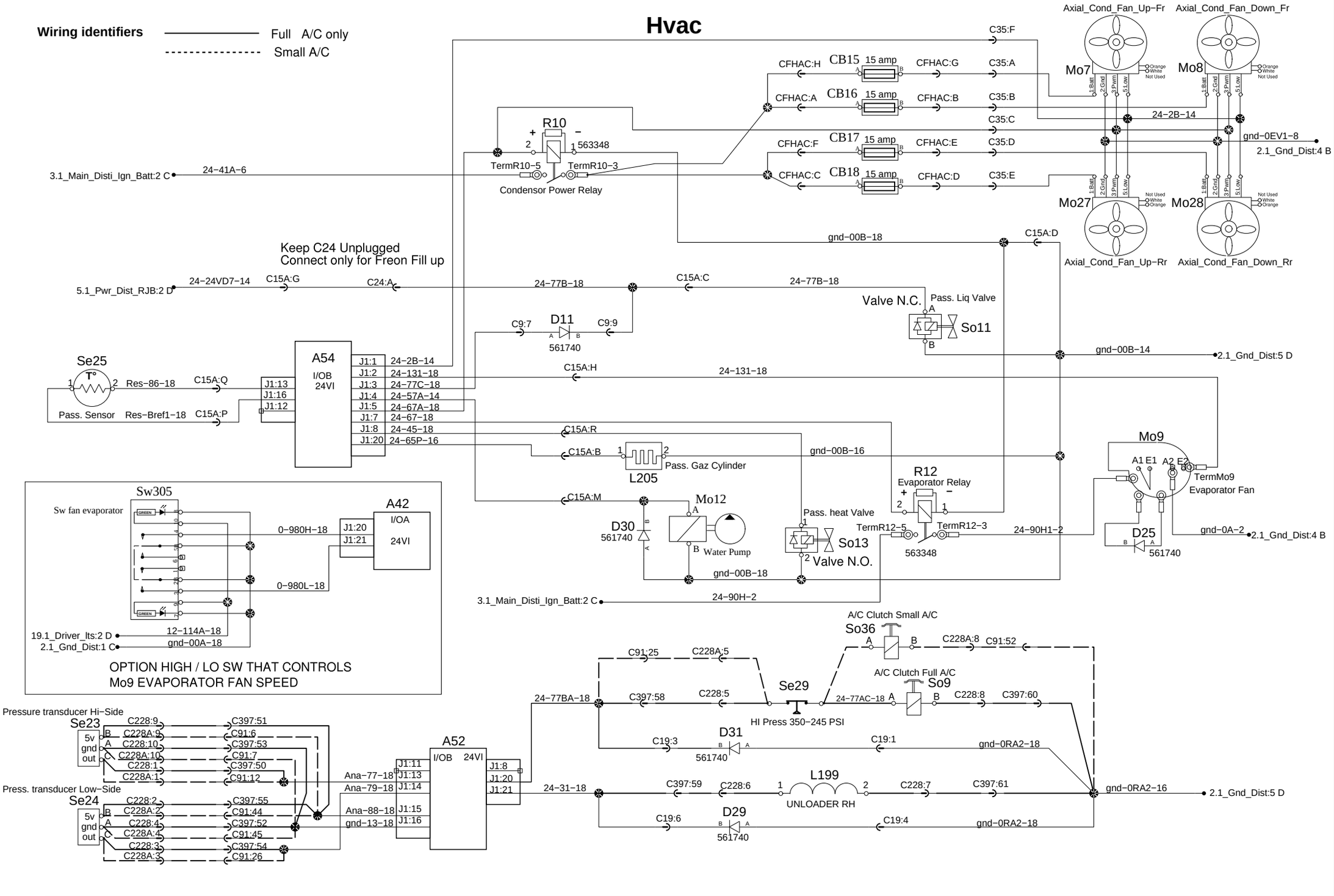

Hvac

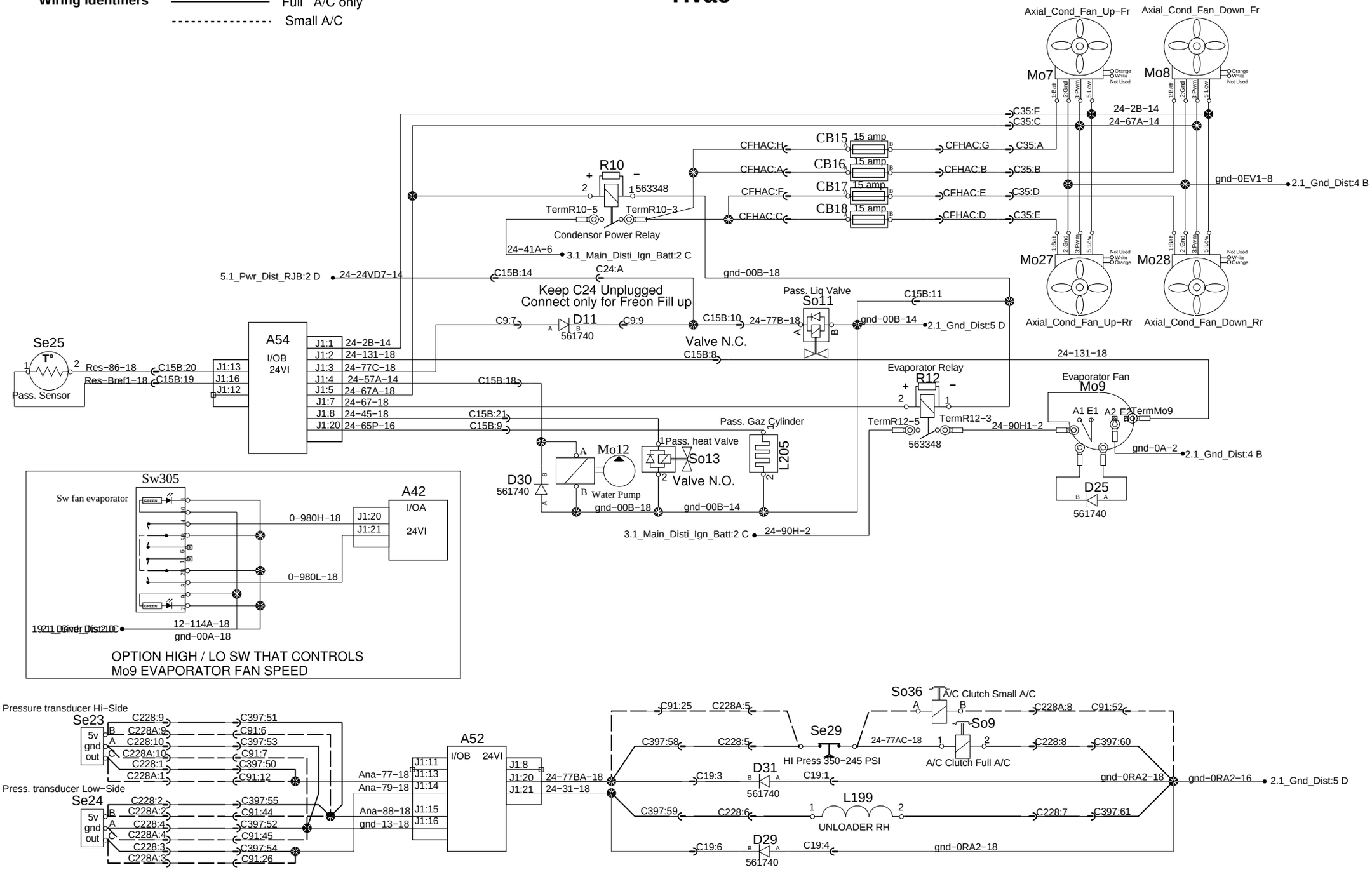

PREVOST®	WIRING DIAGRAM	No:D061360	Page:18.2	Rev:13-1

Hvac

Wiring identifiers ——— Full A/C only
- - - - - - - - - - Small A/C

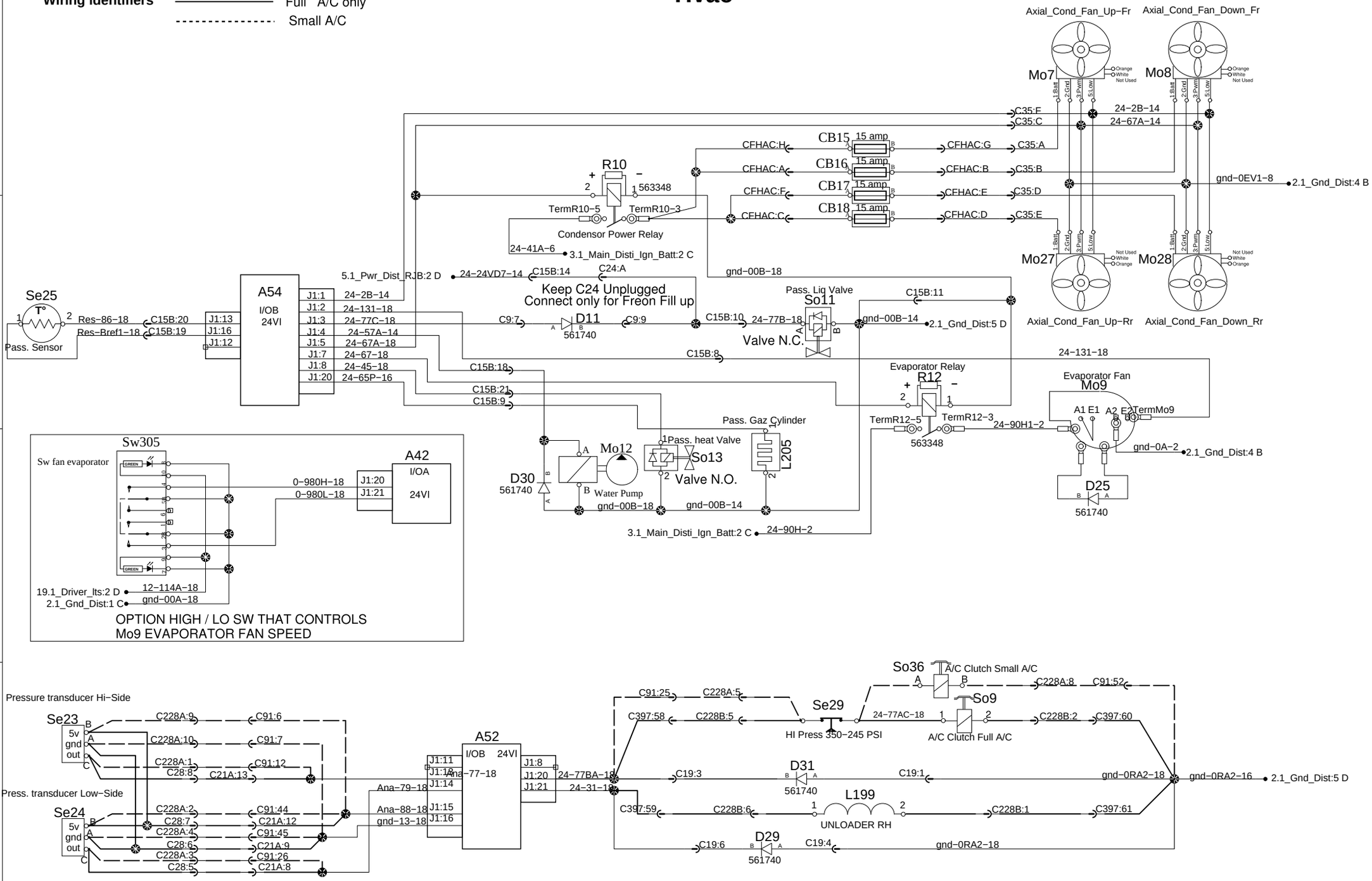

Hvac

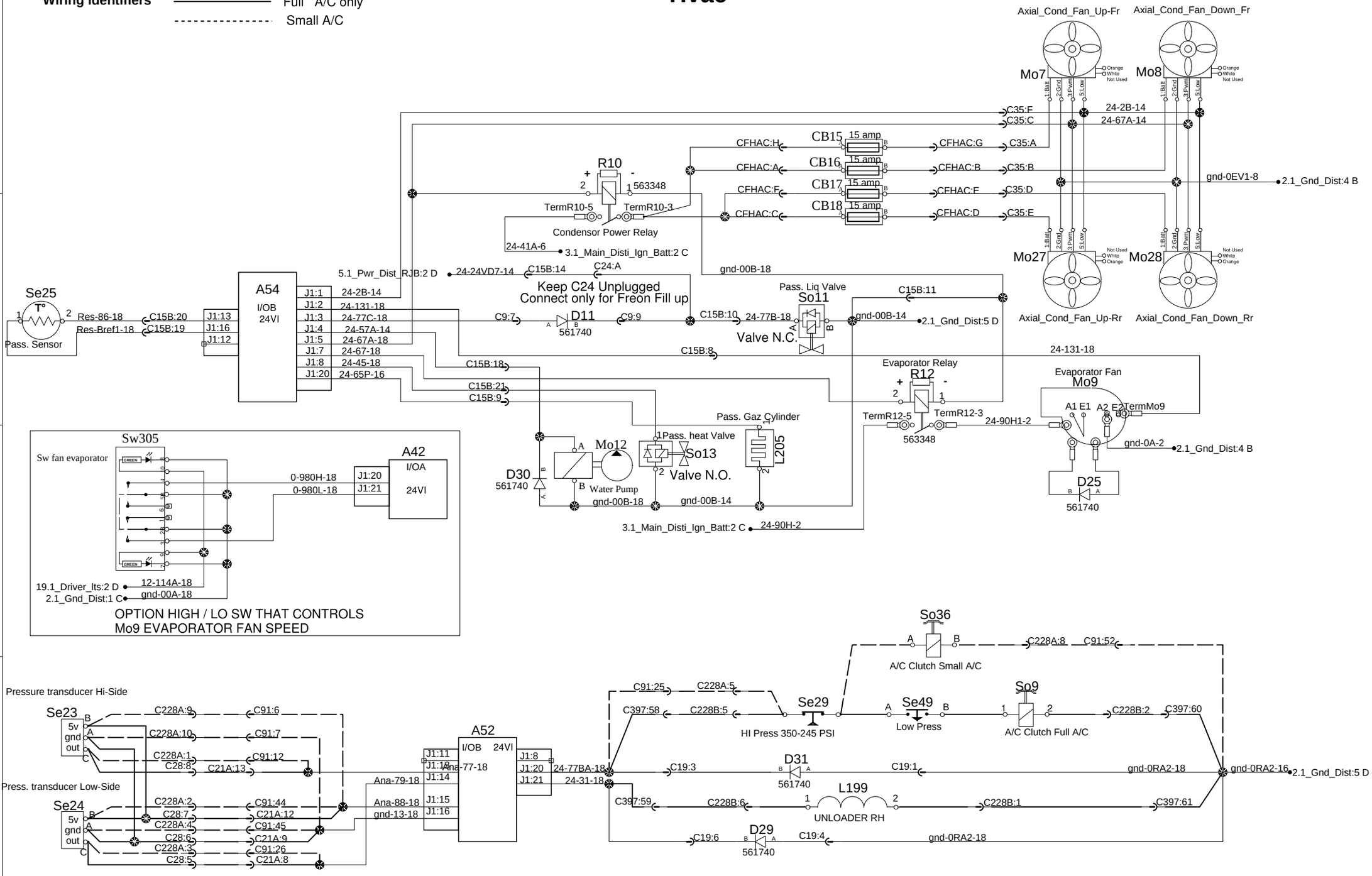

PREVOST®	WIRING DIAGRAM	No:D061360	Page:18.2	Rev:18

Small A/C Only

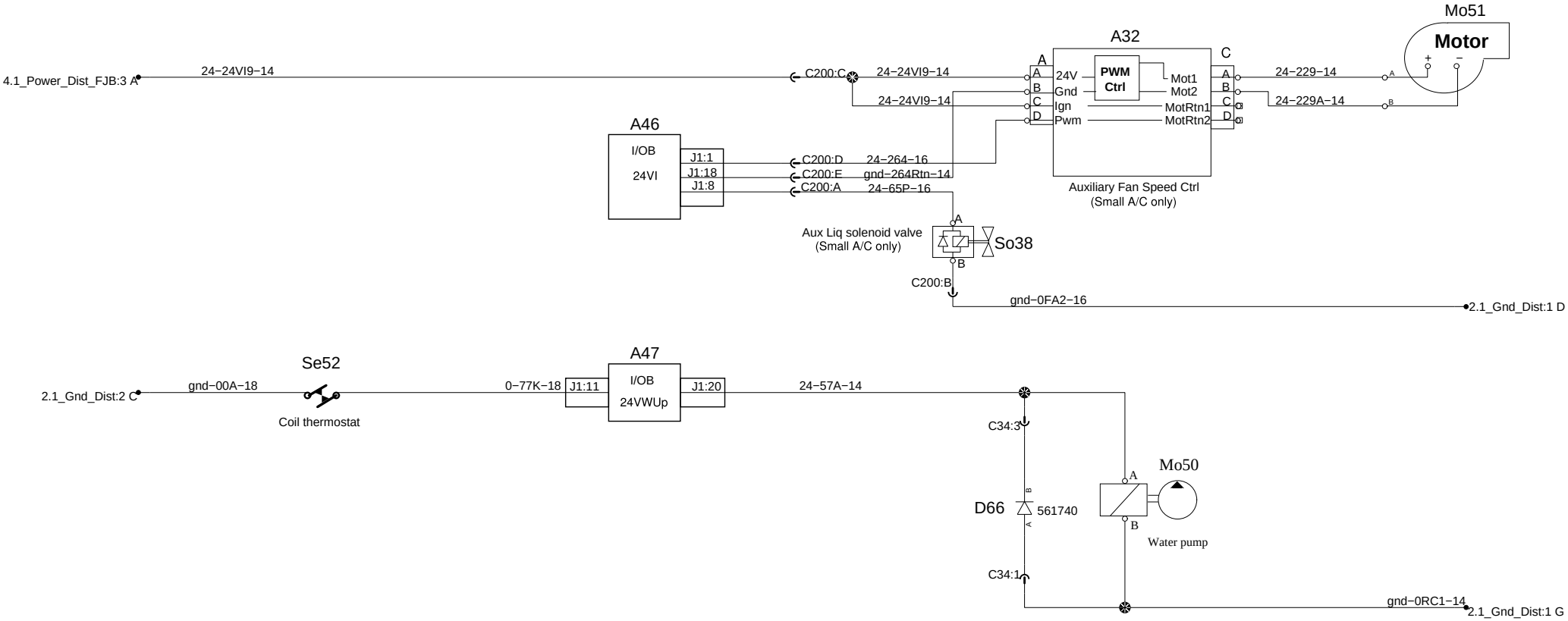

Driver lights

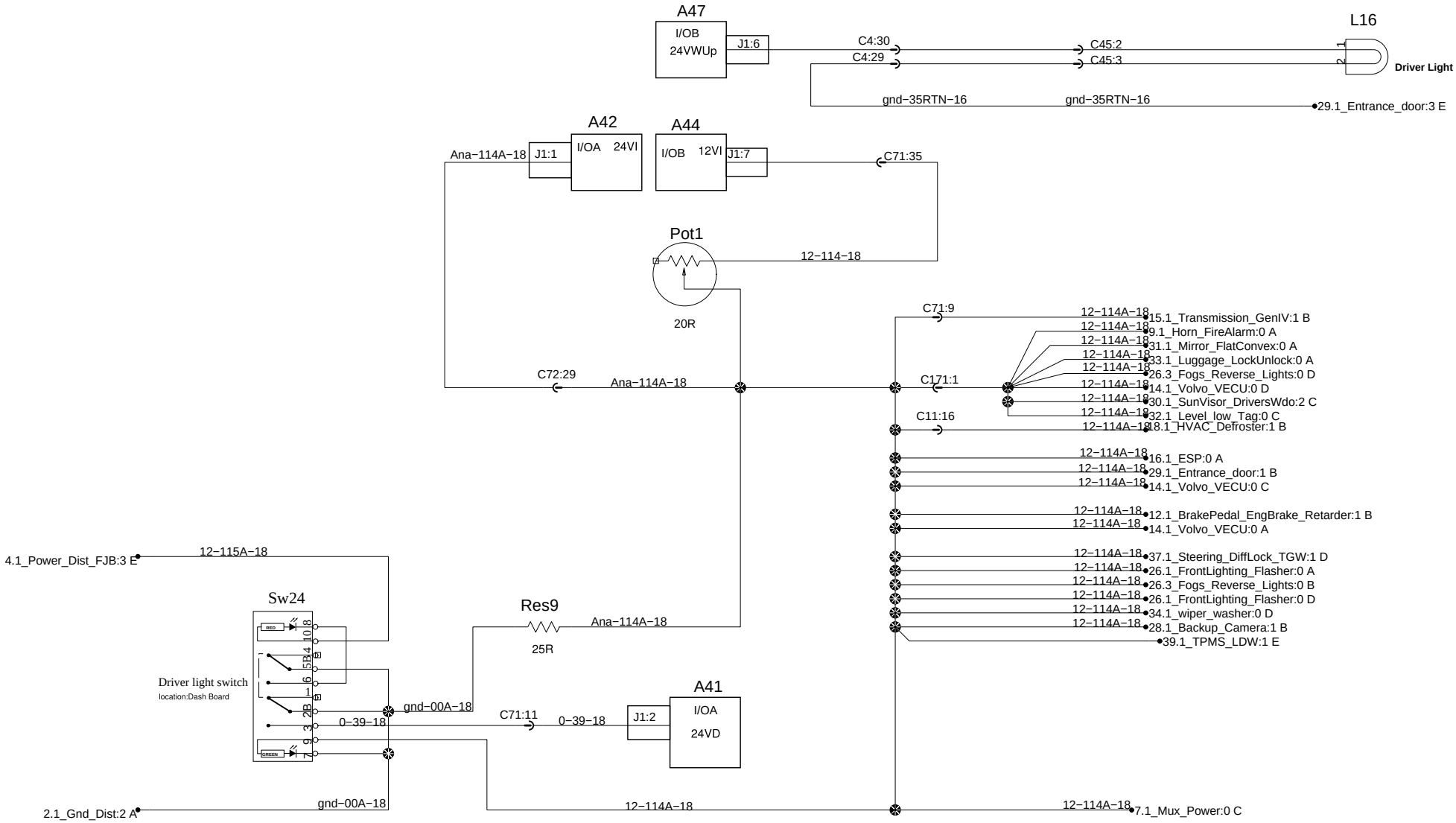

Driver lights

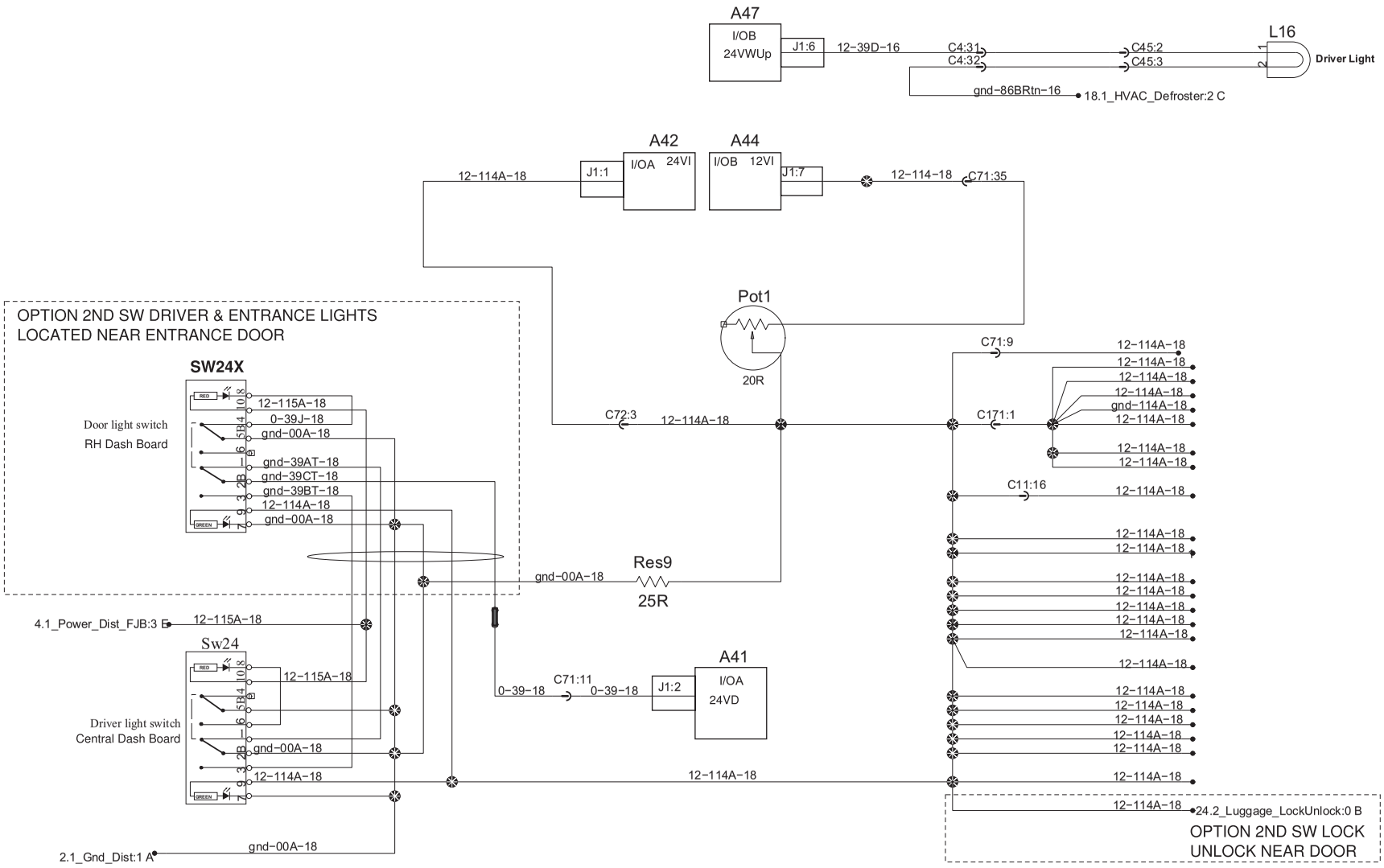

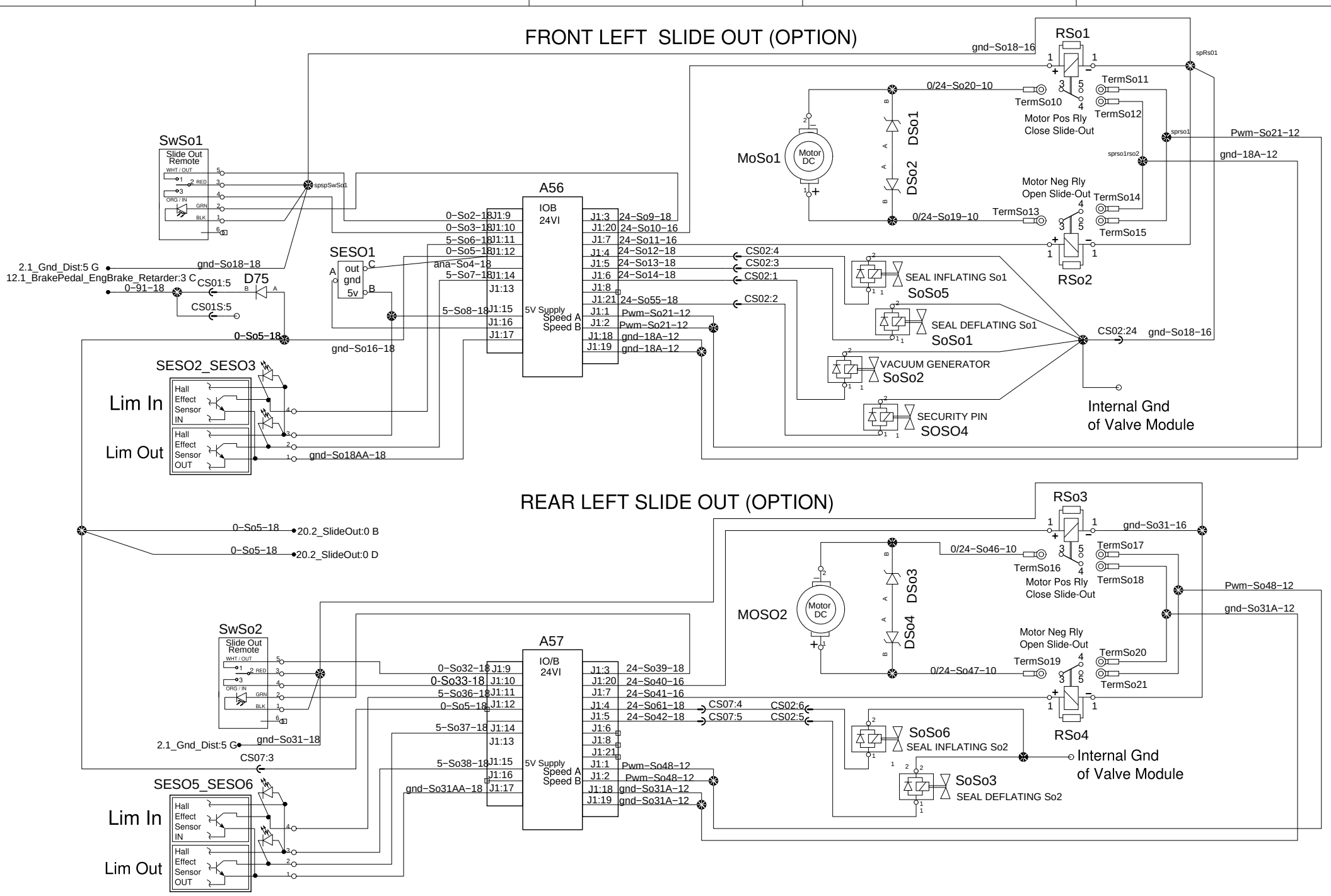

PREVOST®

WIRING DIAGRAM

No:D061360

Page:20.1

Rev:0

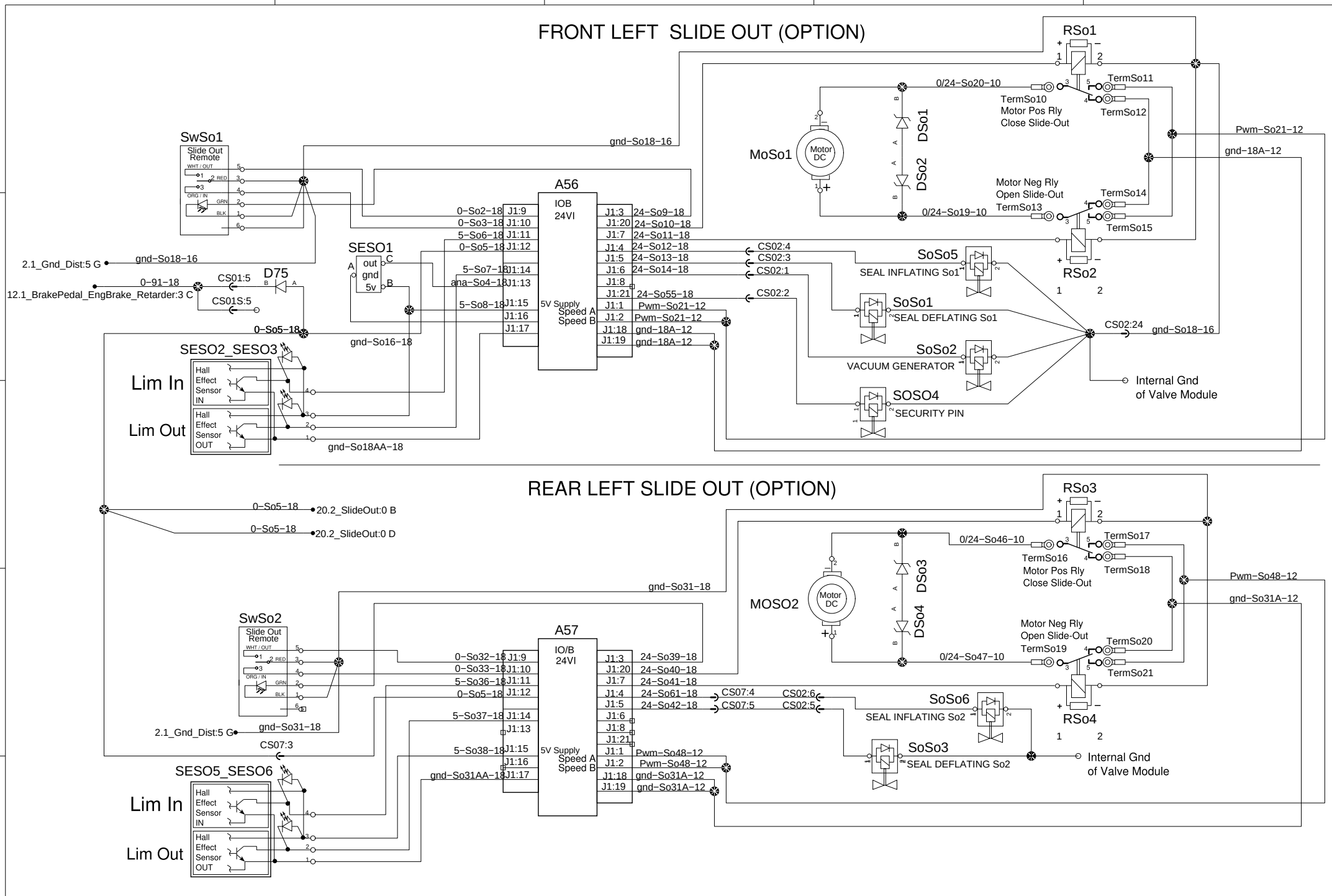

PREVOST®	WIRING DIAGRAM	No:D061360	Page:20.1	Rev:05

FRONT LEFT SLIDE OUT OPTION

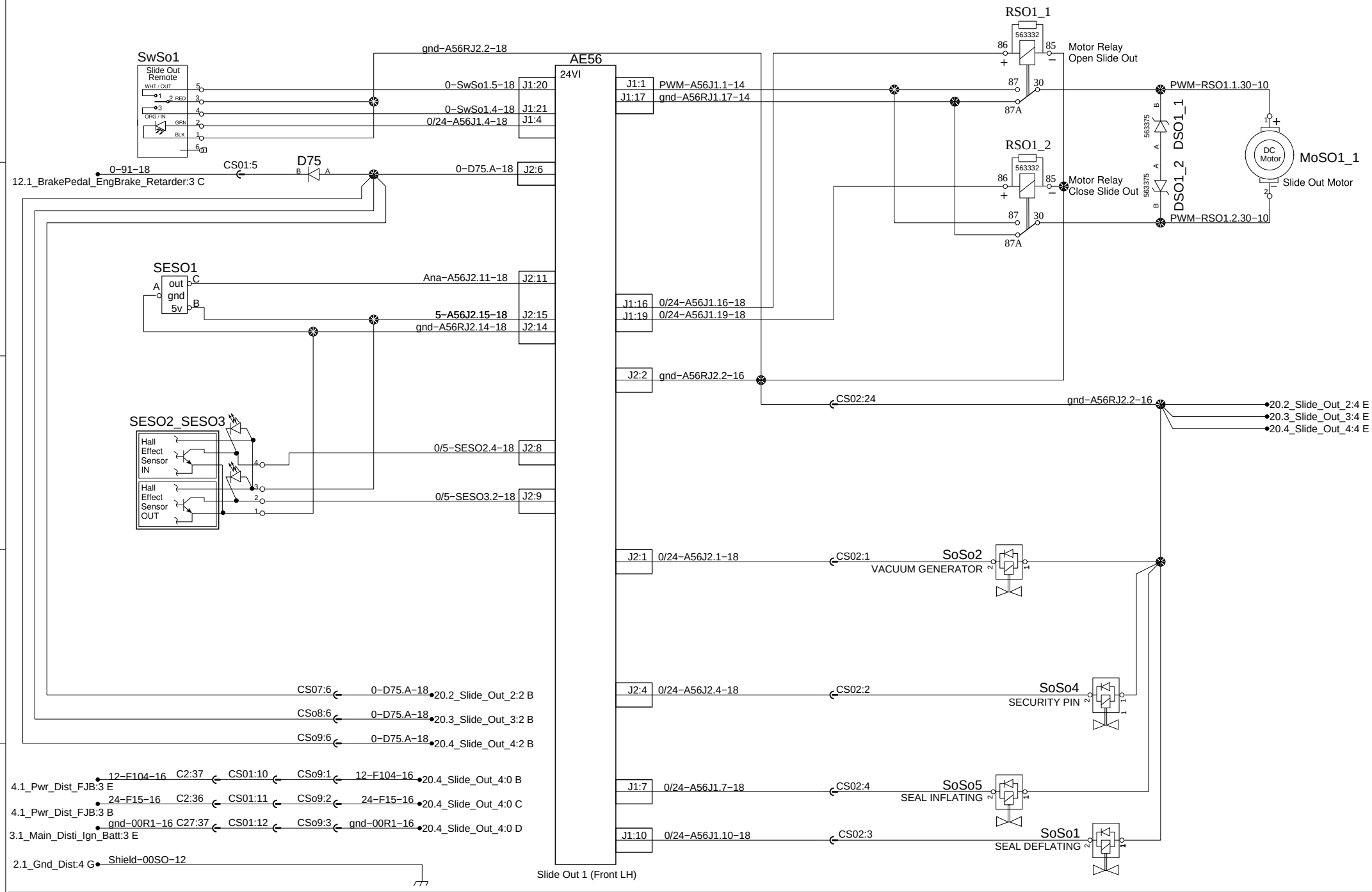

PREVOST®	WIRING DIAGRAM	No:D061360	Page:20.1	Rev:16

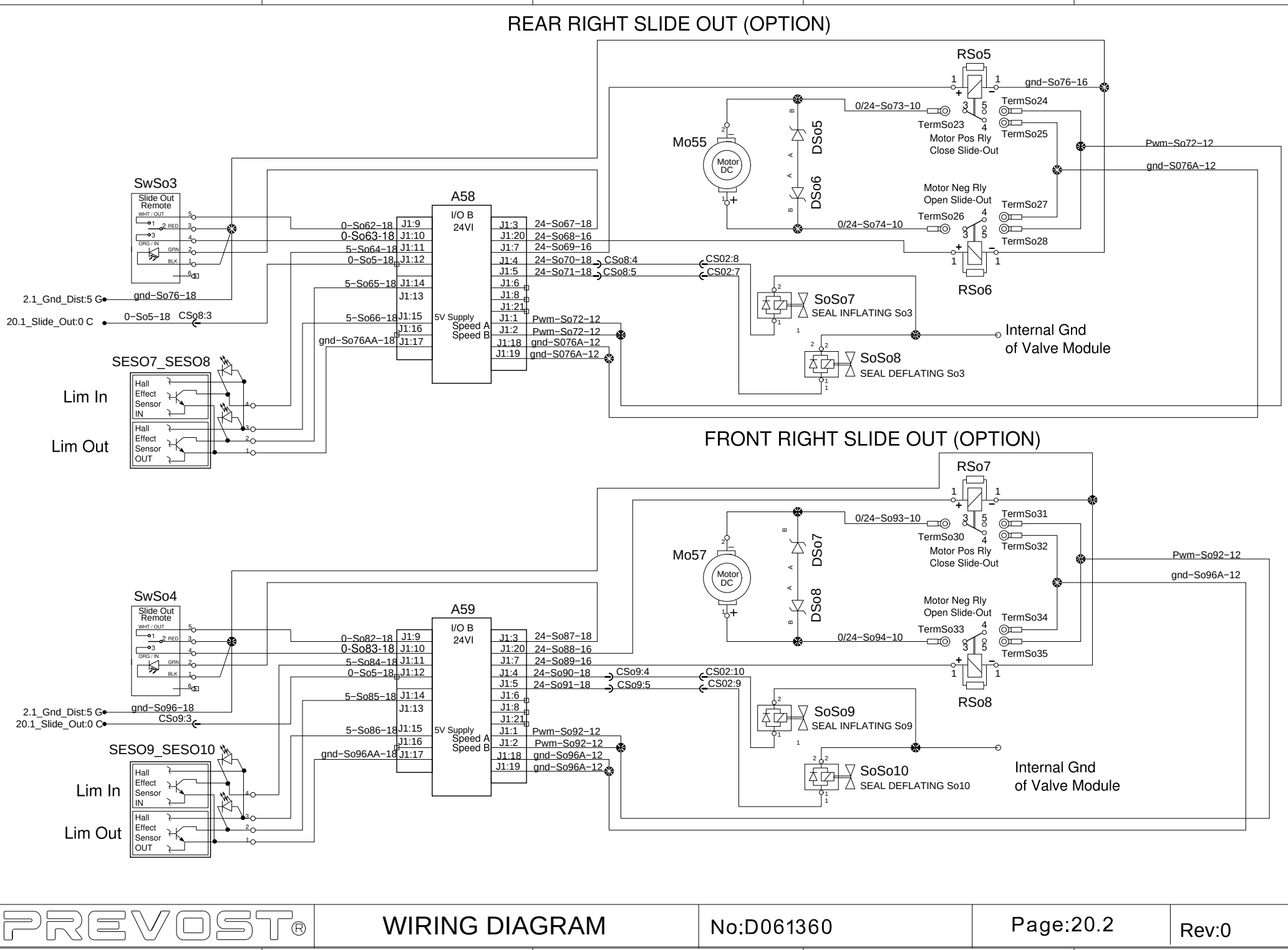
REAR RIGHT SLIDE OUT (OPTION)
RSo5
gnd-So76-16
TermSo24
TermSo25
0/24-So73-10
TermSo23
Motor Pos Rly
Close Slide-Out
Mo55
Motor
DC
DSo5
DSo6
Motor Neg Rly
Open Slide-Out
TermSo26
TermSo27
TermSo28
0/24-So74-10
Pwm-So72-12
gnd-S076A-12
RSo6
SwSo3
Slide Out
Remote
WHT / OUT
RED
ORG / IN
GRN
BLK
A58
I/O B
24VI
5V Supply
Speed A
Speed B
0-So62-18
0-So63-18
5-So64-18
0-So5-18
5-So65-18
5-So66-18
gnd-So76AA-18
J1:9
J1:10
J1:11
J1:12
J1:14
J1:13
J1:15
J1:16
J1:17
J1:3
J1:20
J1:7
J1:4
J1:5
J1:6
J1:8
J1:21
J1:1
J1:2
J1:18
J1:19
24-So67-18
24-So68-16
24-So69-16
24-So70-18
24-So71-18
Pwm-So72-12
Pwm-So72-12
gnd-S076A-12
gnd-S076A-12
CSo8:4
CSo8:5
CS02:8
CS02:7
2.1_Gnd_Dist:5 G
gnd-So76-18
20.1_Slide_Out:0 C
0-So5-18
CSo8:3
SoSo7
SEAL INFLATING So3
SoSo8
SEAL DEFLATING So3
Internal Gnd
of Valve Module
SESO7_SESO8
Lim In
Lim Out
Hall
Effect
Sensor
IN
OUT
FRONT RIGHT SLIDE OUT (OPTION)
RSo7
gnd-So96-16
TermSo31
TermSo32
0/24-So93-10
TermSo30
Motor Pos Rly
Close Slide-Out
Mo57
Motor
DC
DSo7
DSo8
Motor Neg Rly
Open Slide-Out
TermSo33
TermSo34
TermSo35
0/24-So94-10
Pwm-So92-12
gnd-So96A-12
RSo8
SwSo4
Slide Out
Remote
WHT / OUT
RED
ORG / IN
GRN
BLK
A59
I/O B
24VI
5V Supply
Speed A
Speed B
0-So82-18
0-So83-18
5-So84-18
0-So5-18
5-So85-18
5-So86-18
gnd-So96AA-18
J1:9
J1:10
J1:11
J1:12
J1:14
J1:13
J1:15
J1:16
J1:17
J1:3
J1:20
J1:7
J1:4
J1:5
J1:6
J1:8
J1:21
J1:1
J1:2
J1:18
J1:19
24-So87-18
24-So88-16
24-So89-16
24-So90-18
24-So91-18
Pwm-So92-12
Pwm-So92-12
gnd-So96A-12
gnd-So96A-12
CSo9:4
CSo9:5
CS02:10
CS02:9
2.1_Gnd_Dist:5 G
gnd-So96-18
20.1_Slide_Out:0 C
CSo9:3
SoSo9
SEAL INFLATING So9
SoSo10
SEAL DEFLATING So10
Internal Gnd
of Valve Module
SESO9_SESO10
Lim In
Lim Out
Hall
Effect
Sensor
IN
OUT

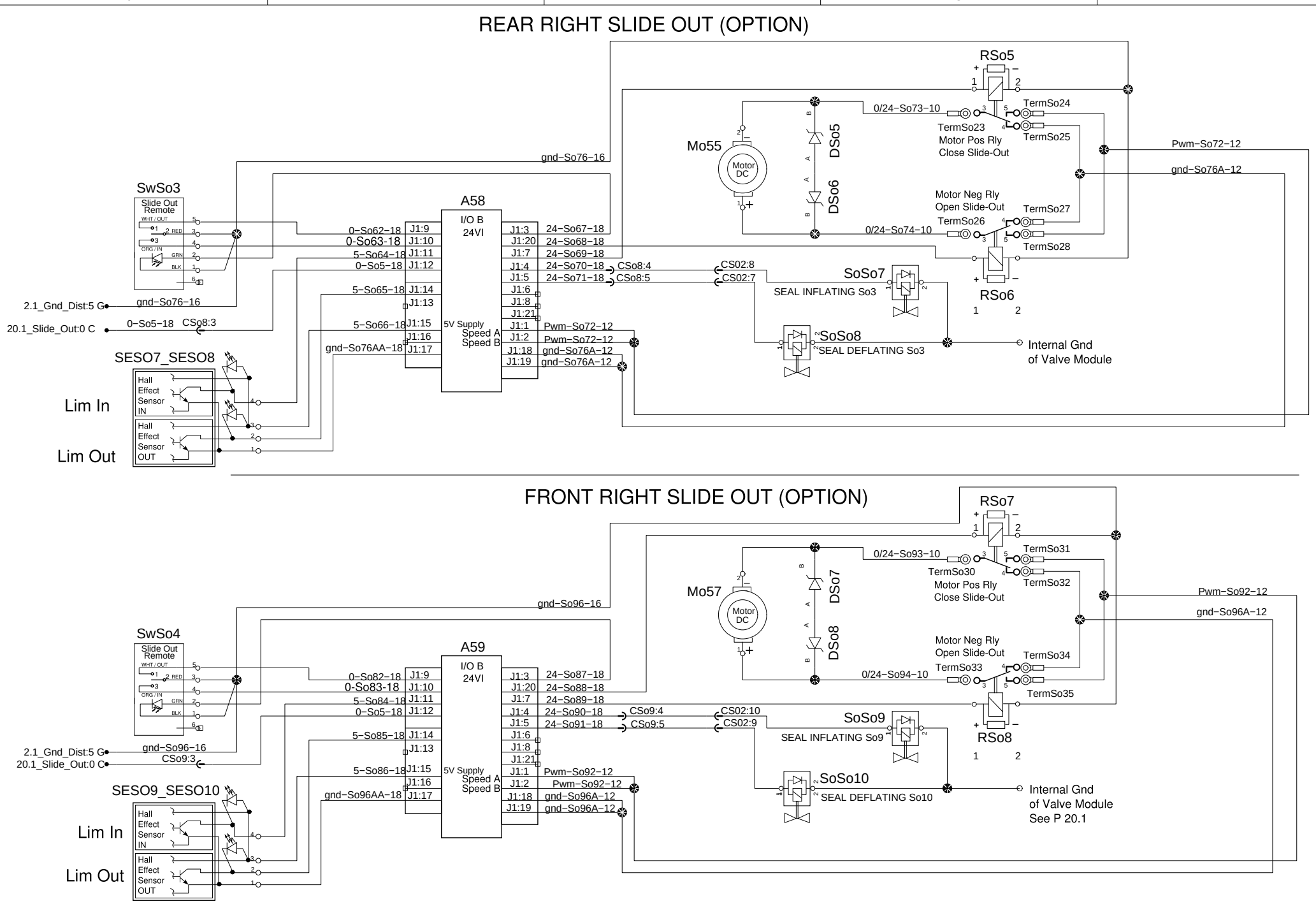
REAR RIGHT SLIDE OUT (OPTION)
RSo5
Mo55
Motor DC
DSo5
DSo6
0/24-So73-10
TermSo24
TermSo23
Motor Pos Rly
Close Slide-Out
TermSo25
Pwm-So72-12
gnd-So76A-12
gnd-So76-16
Motor Neg Rly
Open Slide-Out
TermSo26
TermSo27
0/24-So74-10
TermSo28
RSo6
SwSo3
Slide Out Remote
A58
I/O B
24VI
5V Supply
Speed A
Speed B
0-So62-18
0-So63-18
5-So64-18
0-So5-18
5-So65-18
5-So66-18
gnd-So76AA-18
24-So67-18
24-So68-18
24-So69-18
24-So70-18
24-So71-18
CSo8:4
CSo8:5
CS02:8
CS02:7
SoSo7
SEAL INFLATING So3
SoSo8
SEAL DEFLATING So3
Internal Gnd
of Valve Module
2.1_Gnd_Dist:5 G
20.1_Slide_Out:0 C
CSo8:3
SESO7_SESO8
Hall Effect Sensor IN
Hall Effect Sensor OUT
Lim In
Lim Out
FRONT RIGHT SLIDE OUT (OPTION)
RSo7
Mo57
DSo7
DSo8
0/24-So93-10
TermSo31
TermSo30
TermSo32
Pwm-So92-12
gnd-So96A-12
gnd-So96-16
Motor Neg Rly
Open Slide-Out
TermSo33
TermSo34
0/24-So94-10
TermSo35
RSo8
SwSo4
A59
0-So82-18
0-So83-18
5-So84-18
0-So5-18
5-So85-18
5-So86-18
gnd-So96AA-18
24-So87-18
24-So88-18
24-So89-18
24-So90-18
24-So91-18
CSo9:4
CSo9:5
CS02:10
CS02:9
SoSo9
SEAL INFLATING So9
SoSo10
SEAL DEFLATING So10
Internal Gnd
of Valve Module
See P 20.1
gnd-So96-16
CSo9:3
SESO9_SESO10

REAR LEFT SLIDE OUT OPTION

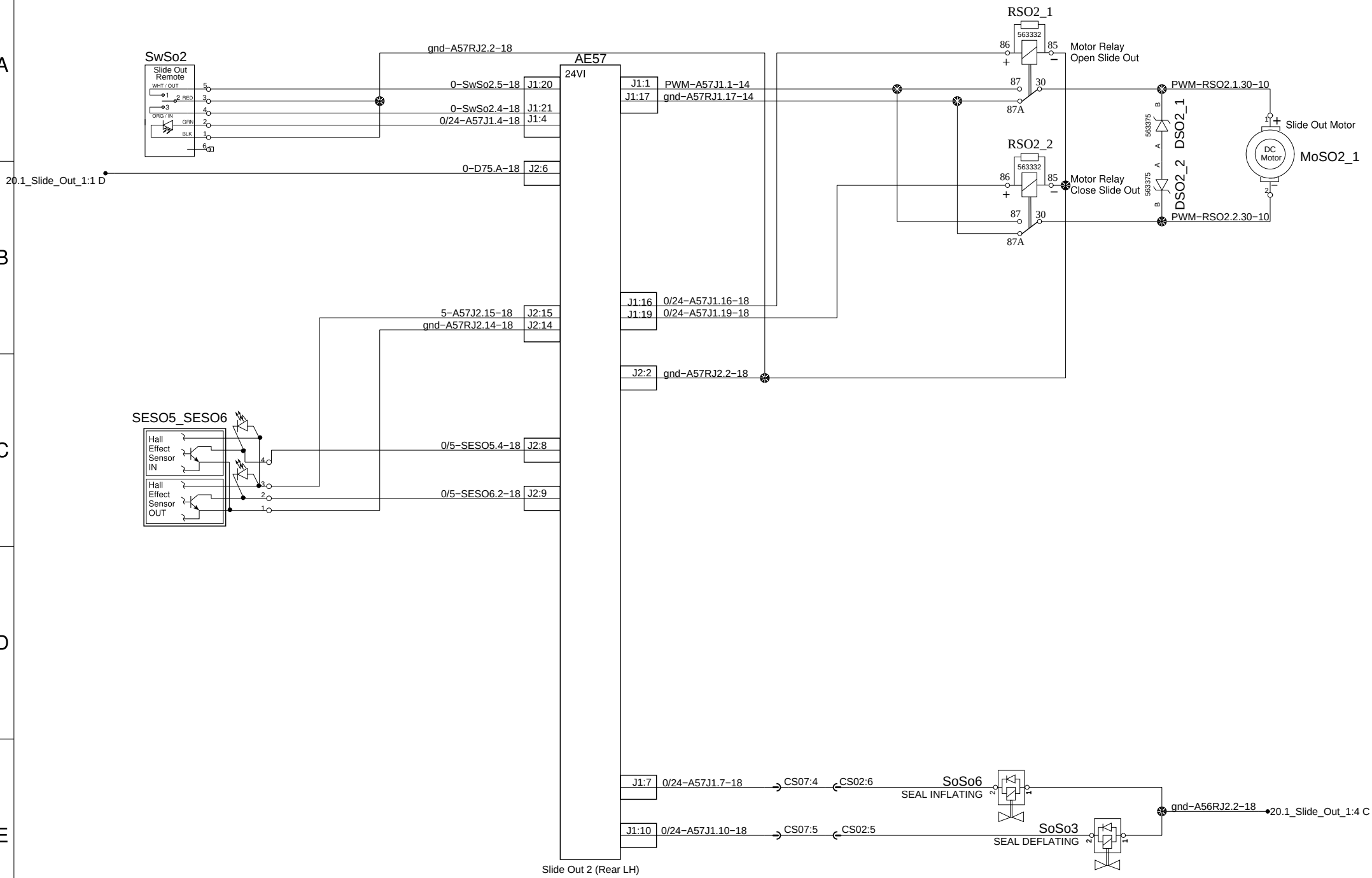

REAR RIGHT SLIDE OUT OPTION

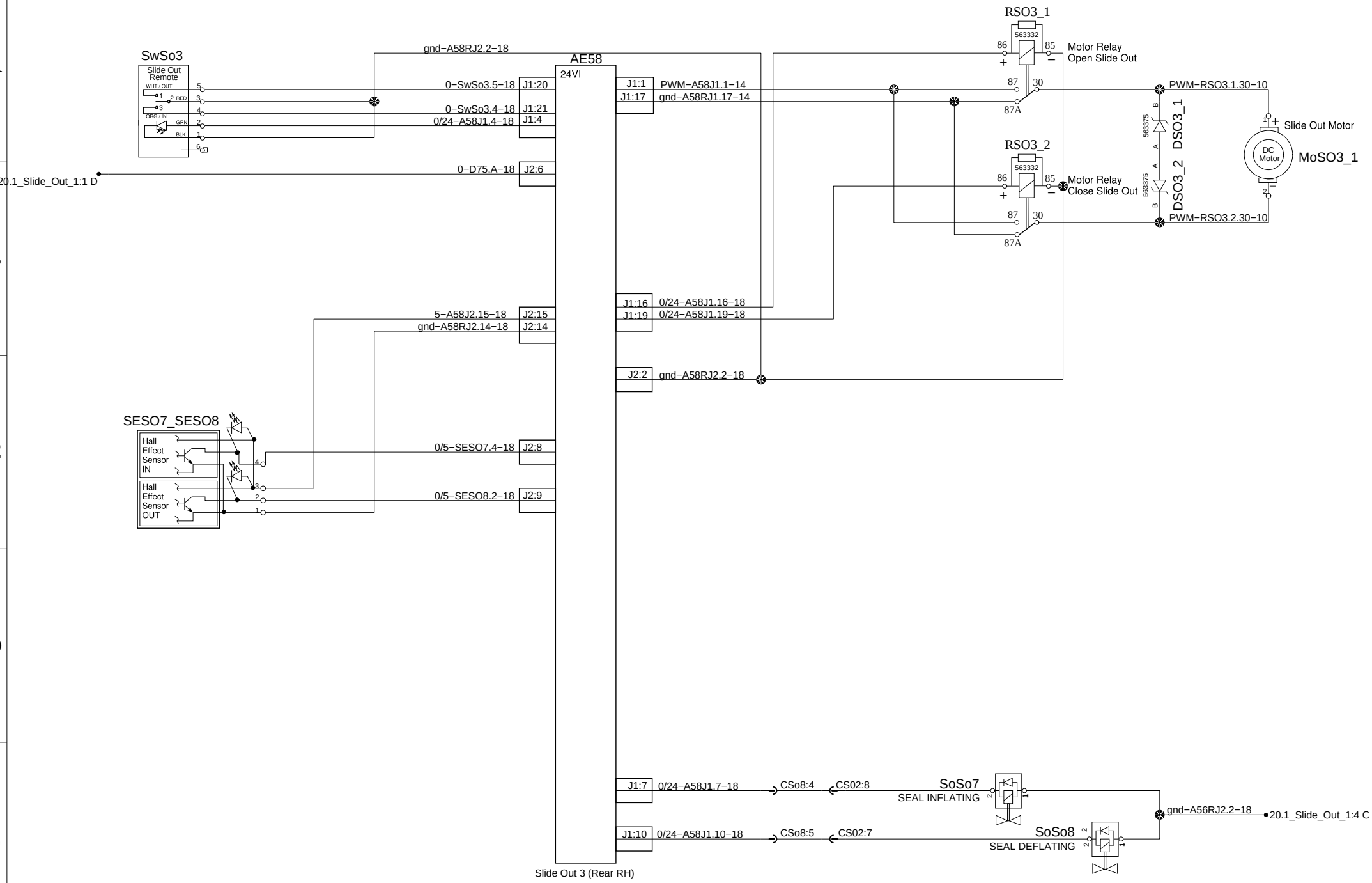

FRONT RIGHT FLUSH FLOOR SLIDE OUT OPTION

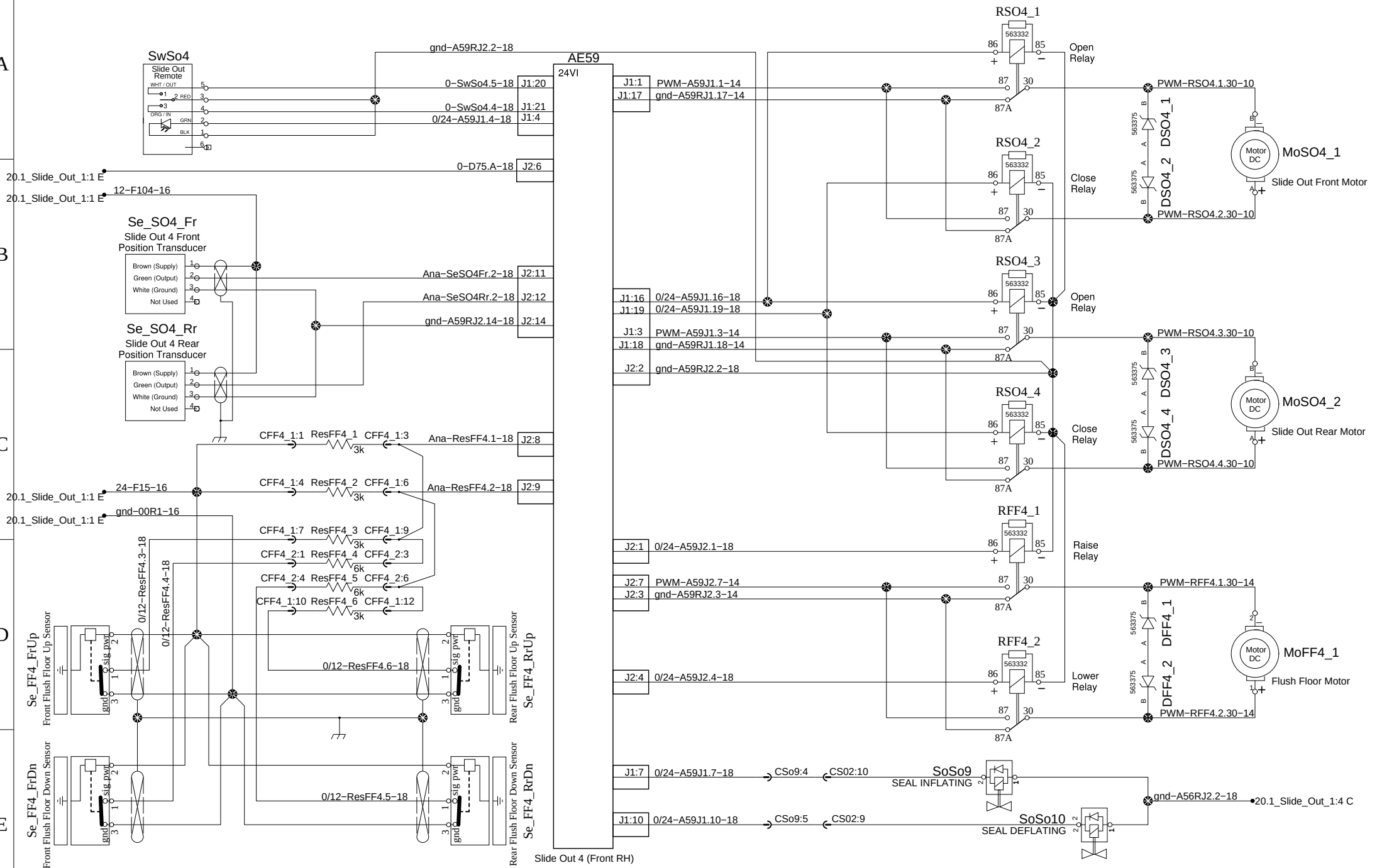

PREVOST®	WIRING DIAGRAM	No:D061360	Page:20.4	Rev:16

Luggage doors locks switches (Switch closed=door locked)

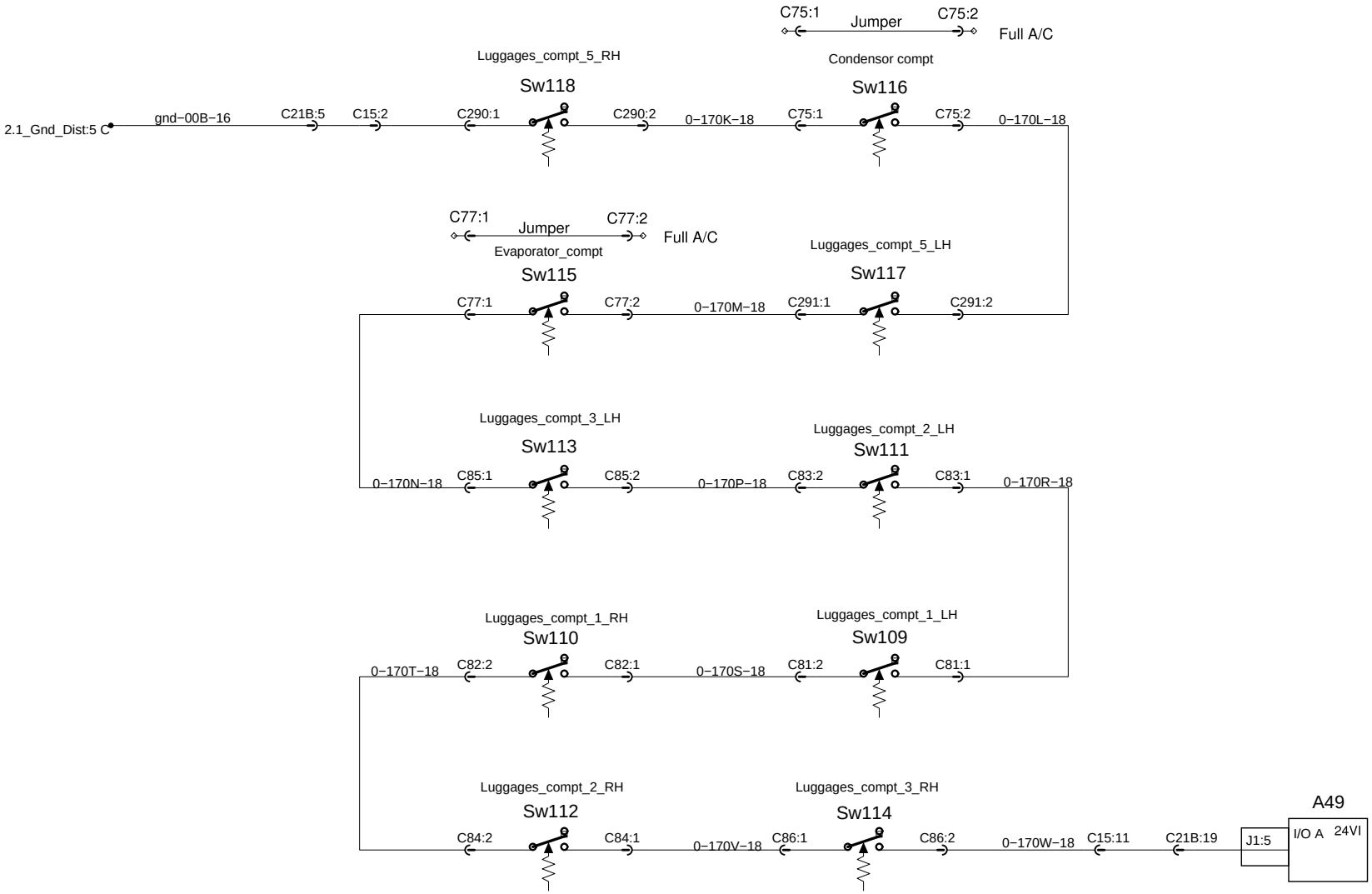

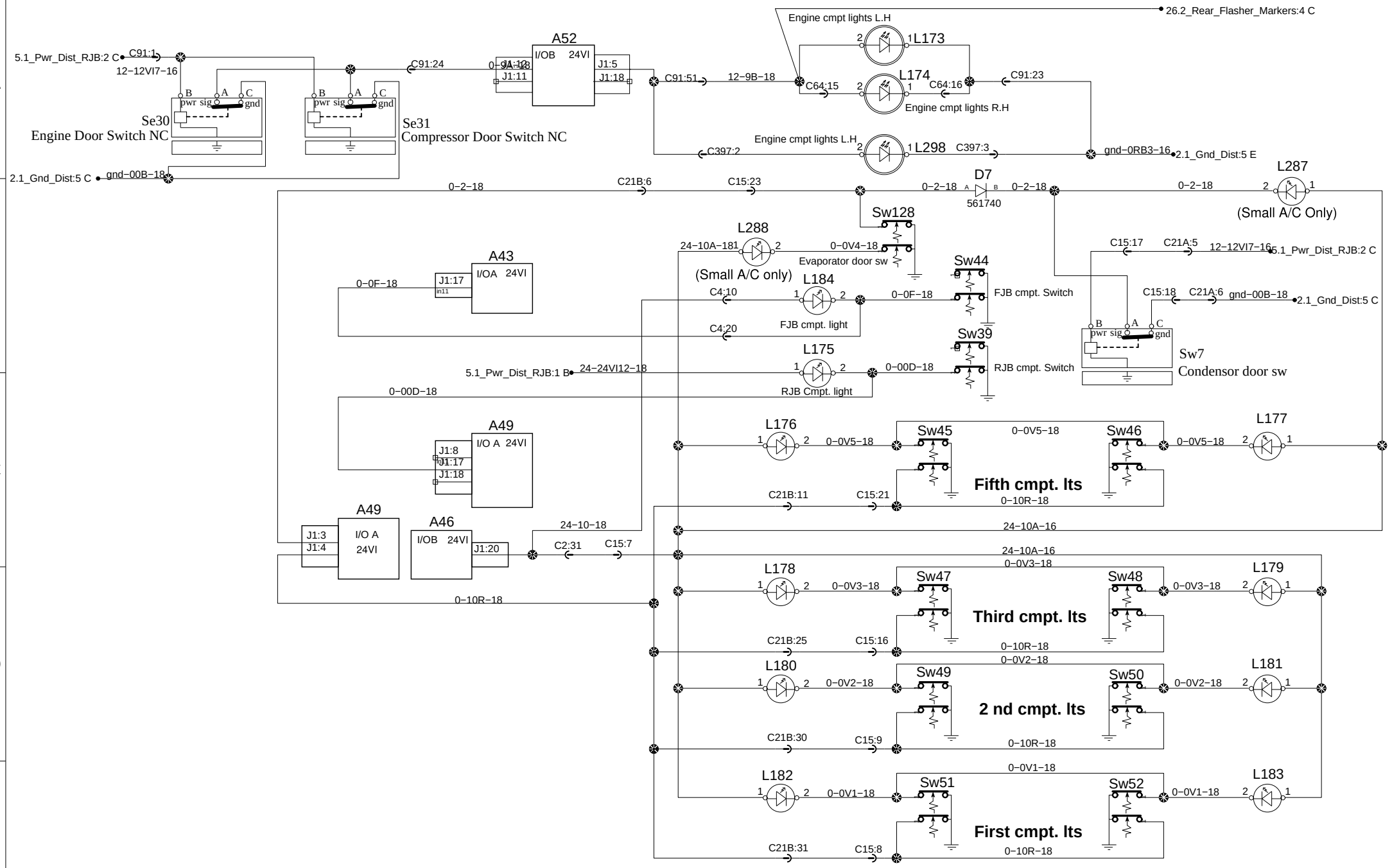

Luggage Compartment and Engine cmpt. lighting

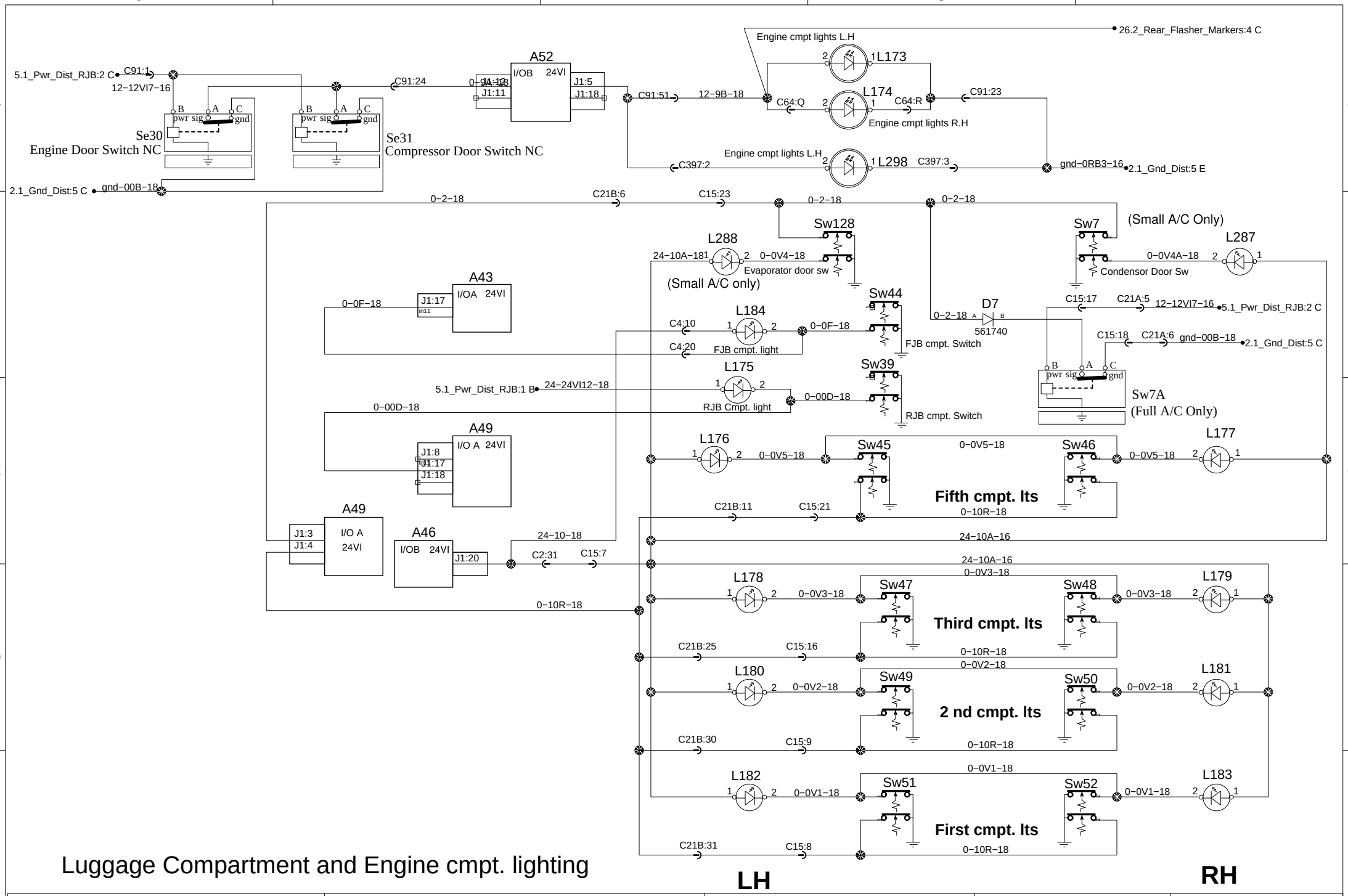

Luggage Compartment and Engine cmpt. lighting

Luggage Compartment and Engine cmpt. lighting

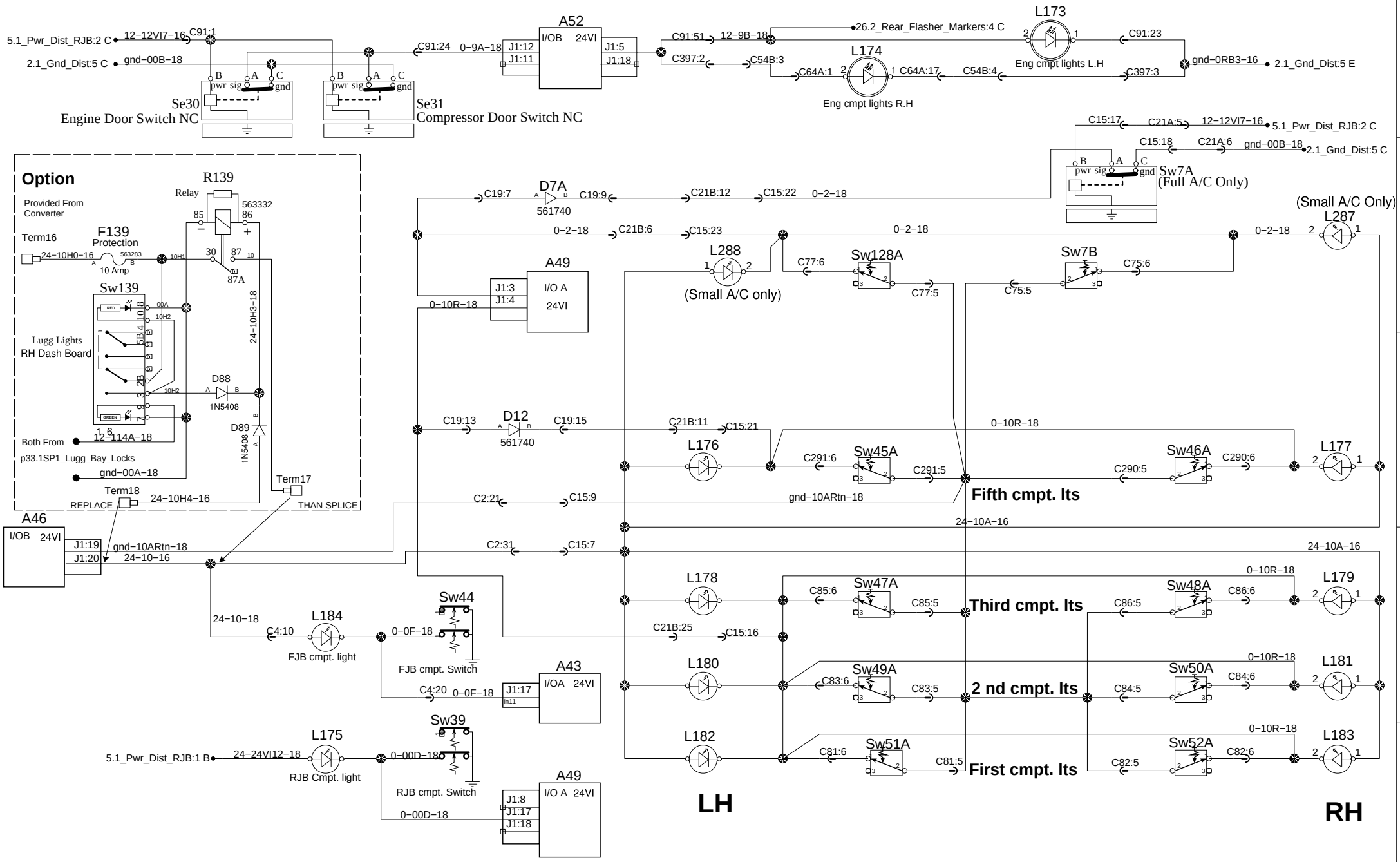

Luggage Compartment and Engine cmpt. lighting

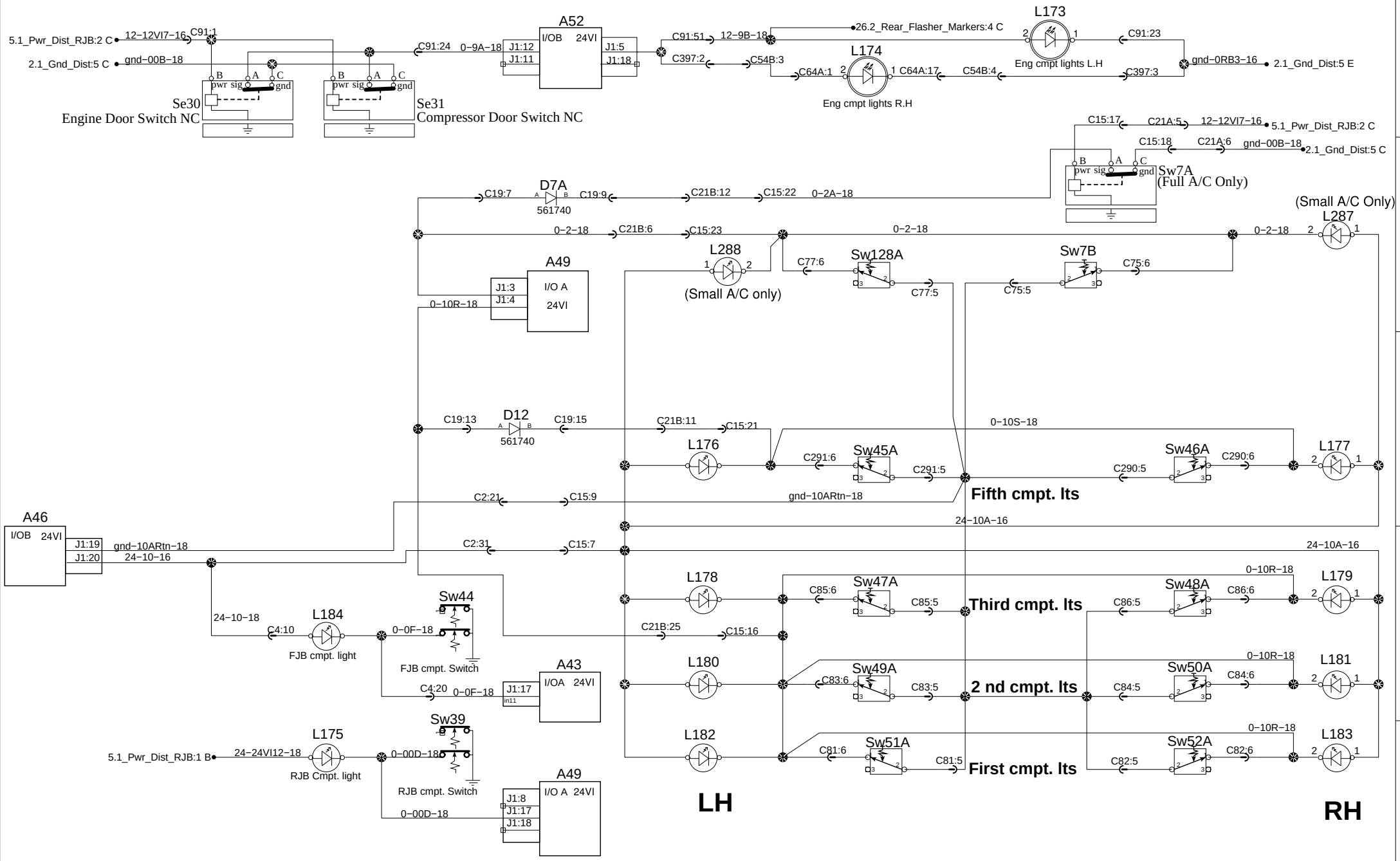

PREVOST®	WIRING DIAGRAM	No:D061360	Page:25.1	Rev:16

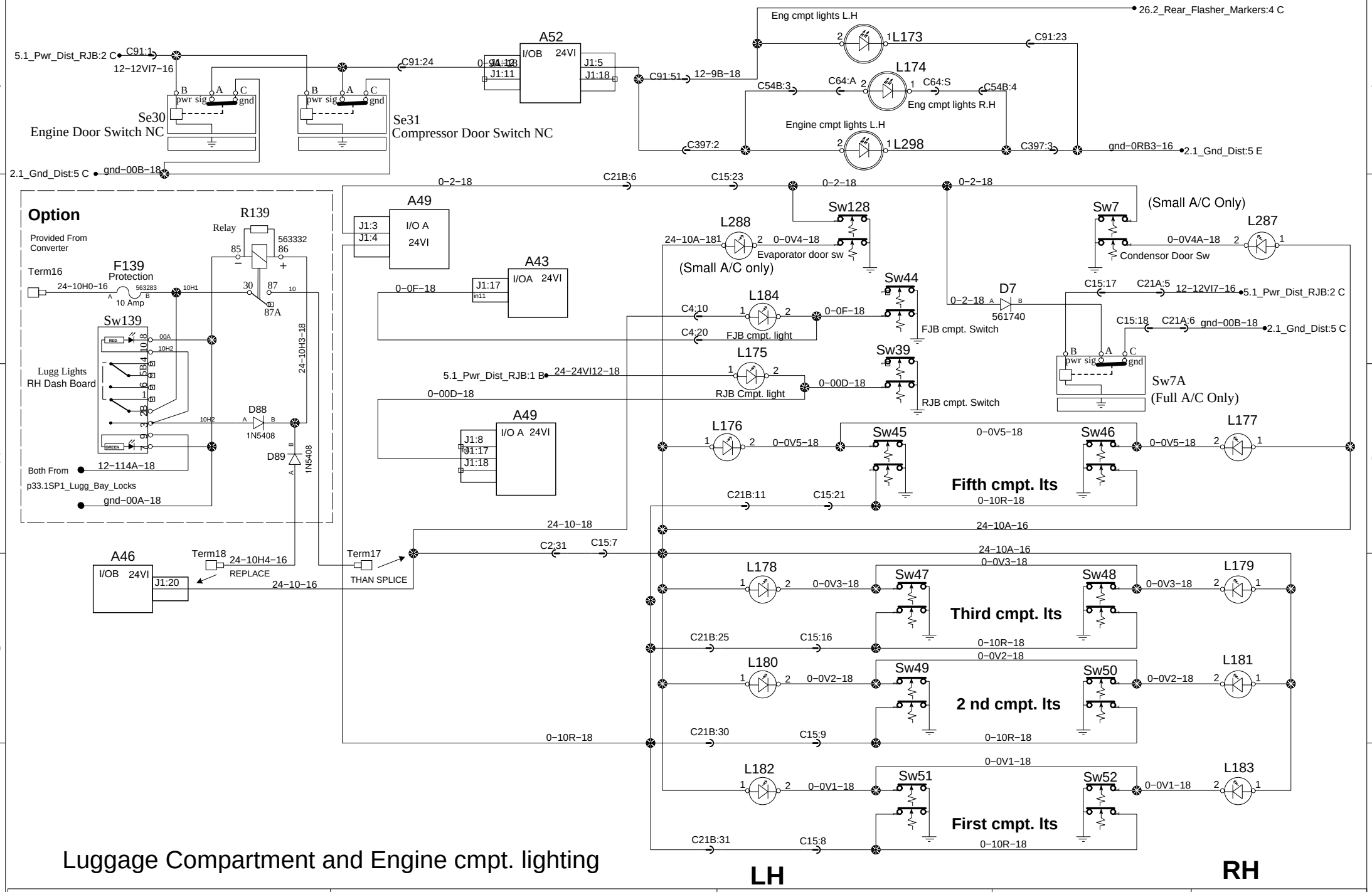

Luggage Compartment and Engine cmpt. lighting

PREVOST®	WIRING DIAGRAM	No:D061360	Page:25.1SP1	Rev:00

Front Flashers, Markers and Head Lights

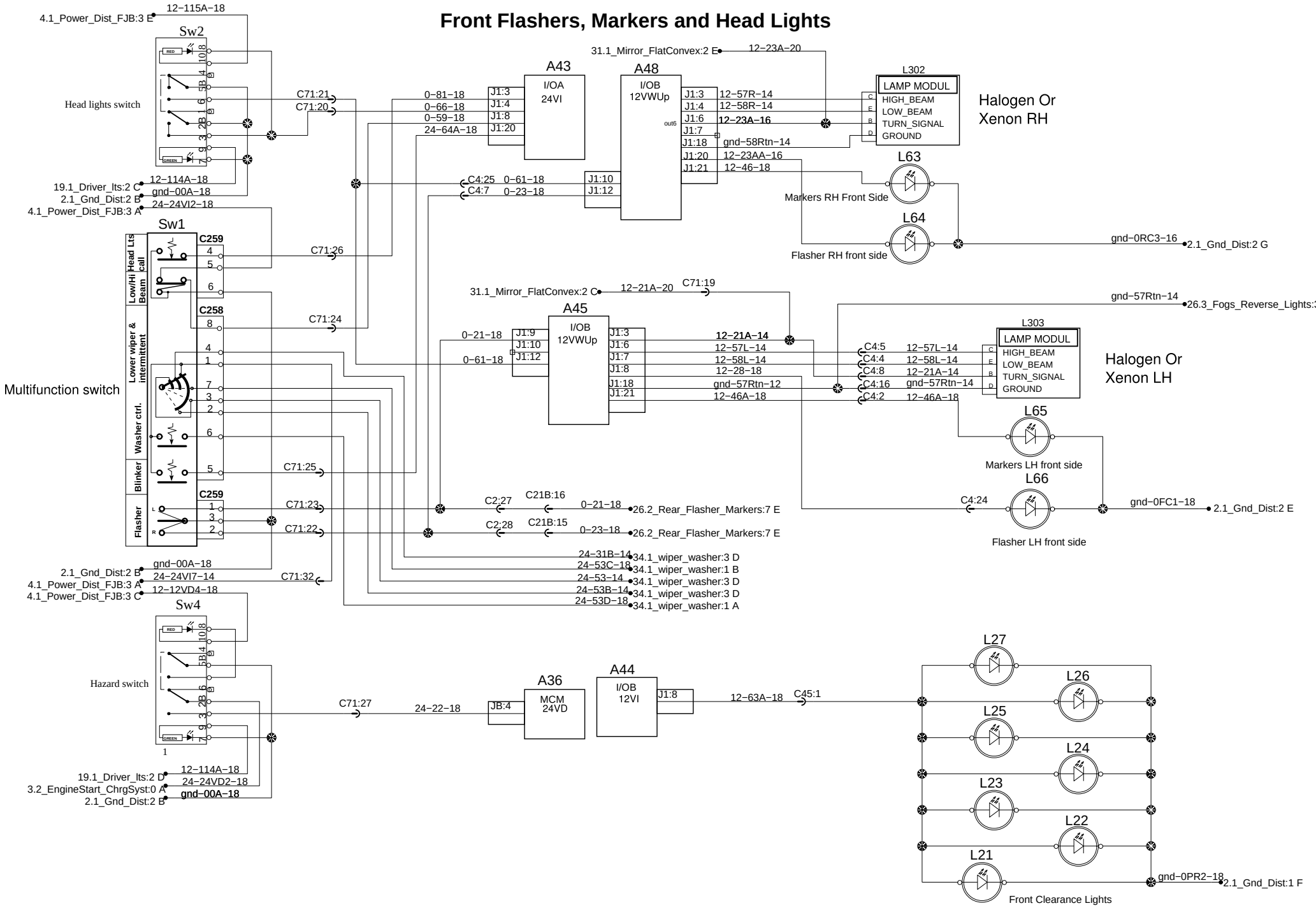

PREVOST®	WIRING DIAGRAM	No:D061360	Page:26.1	Rev:0

Rear Flashers, Markers, Tail and Stop Lights

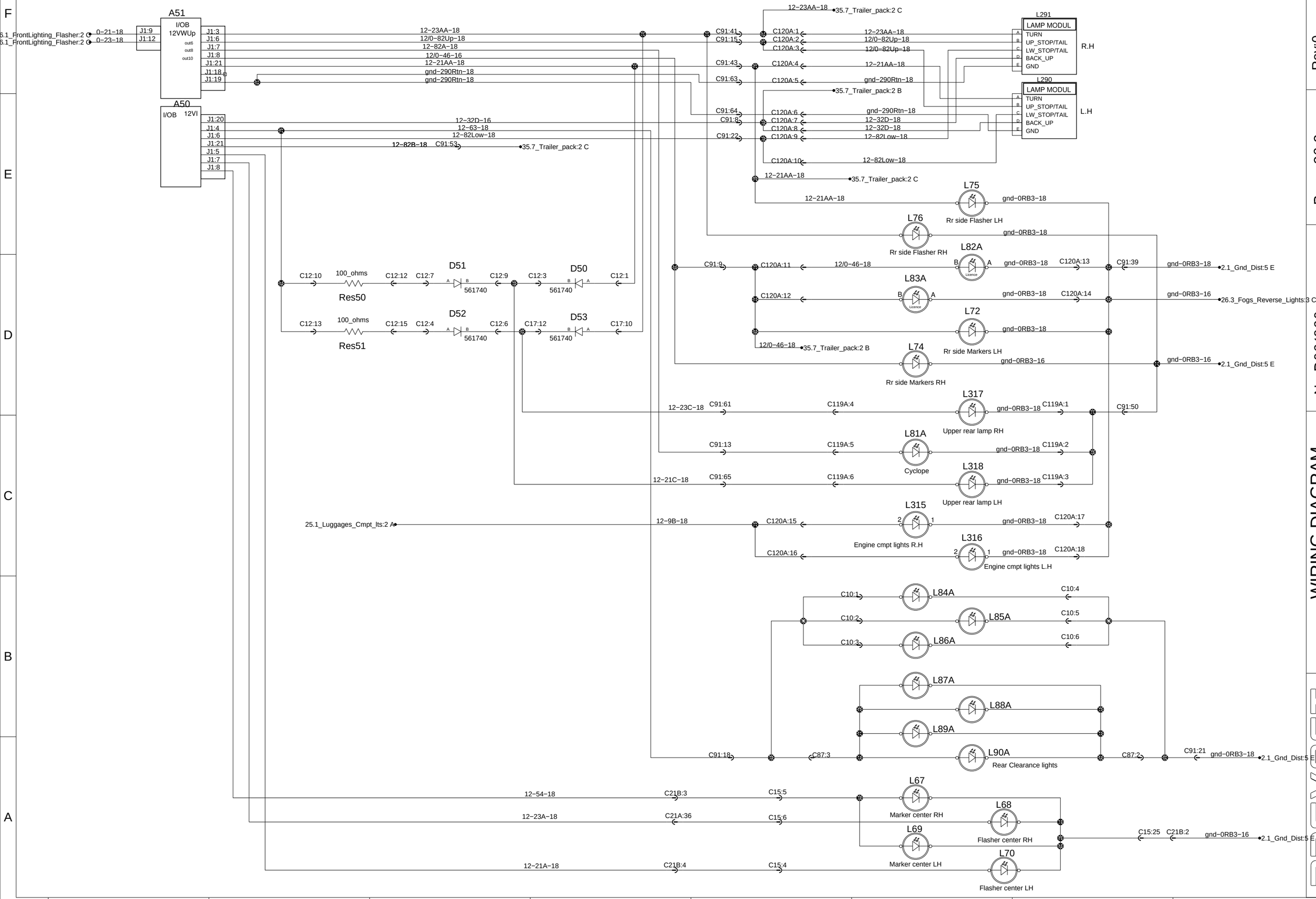

Rear Flashers, Markers, Tail and Stop Lights

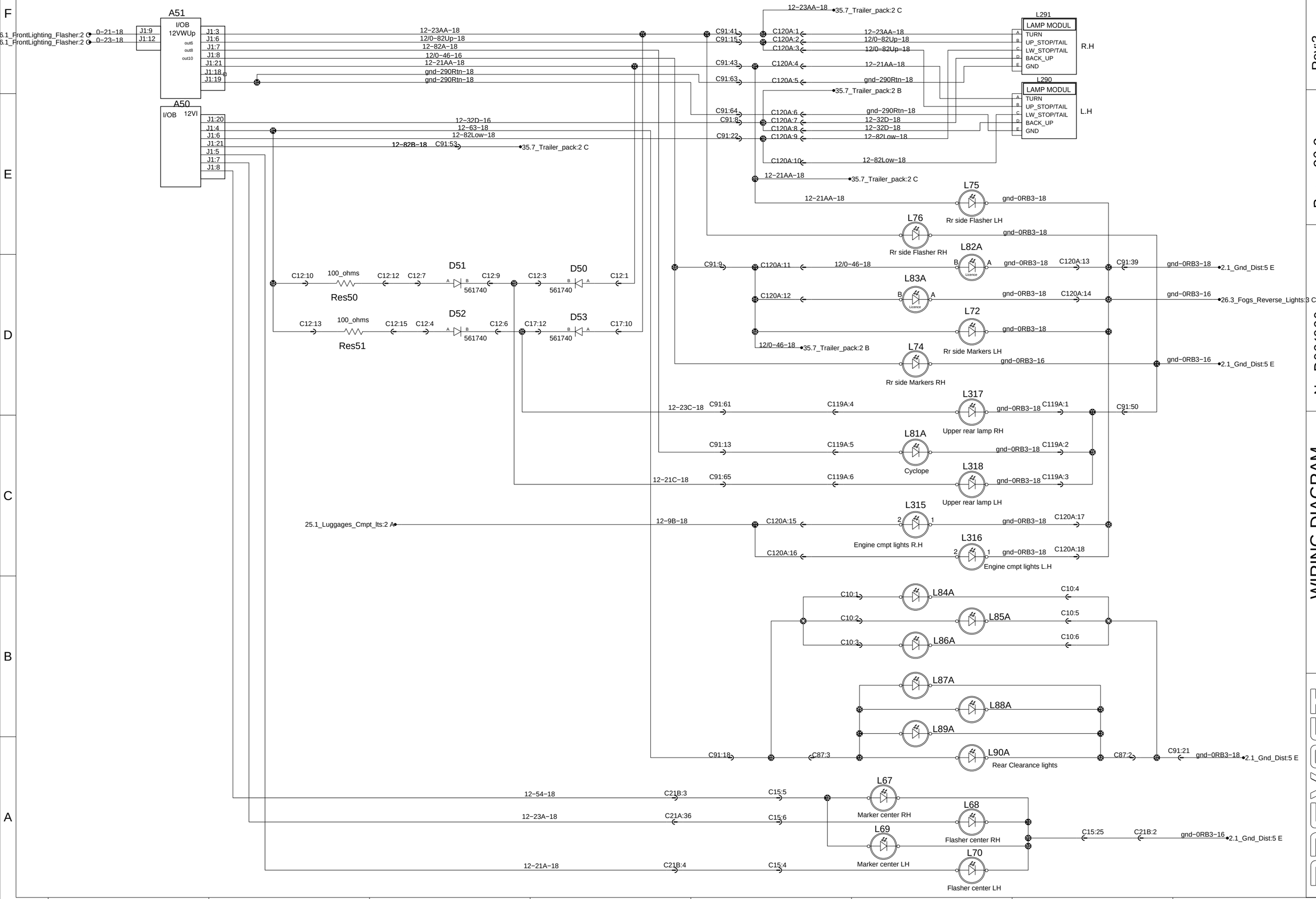

Rev:3

Page:26.2

No:D061360

WIRING DIAGRAM

PREVOST

Fog's Lights and Cornering Lights and Alarm

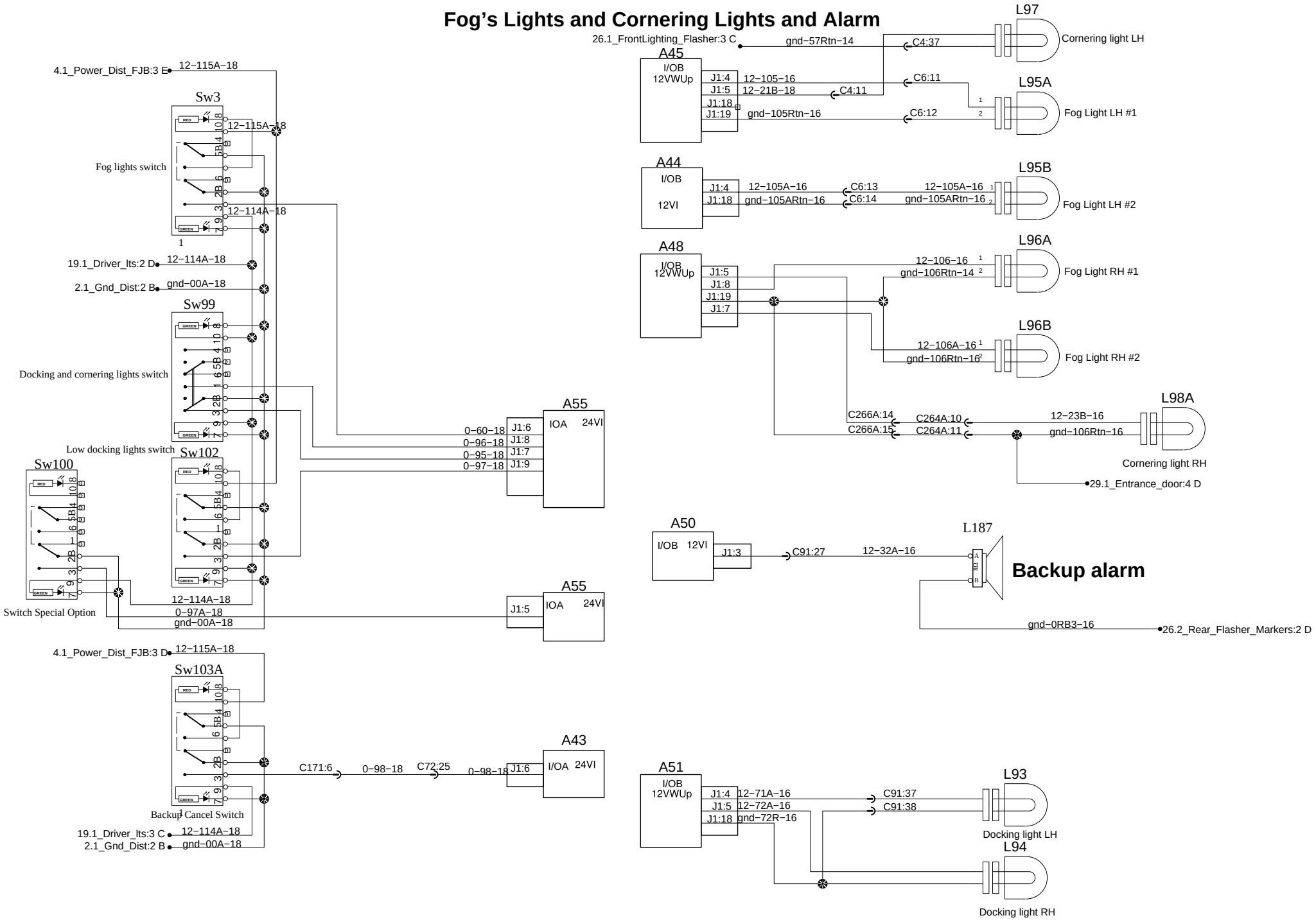

Fog's Lights and Cornering Lights and Alarm

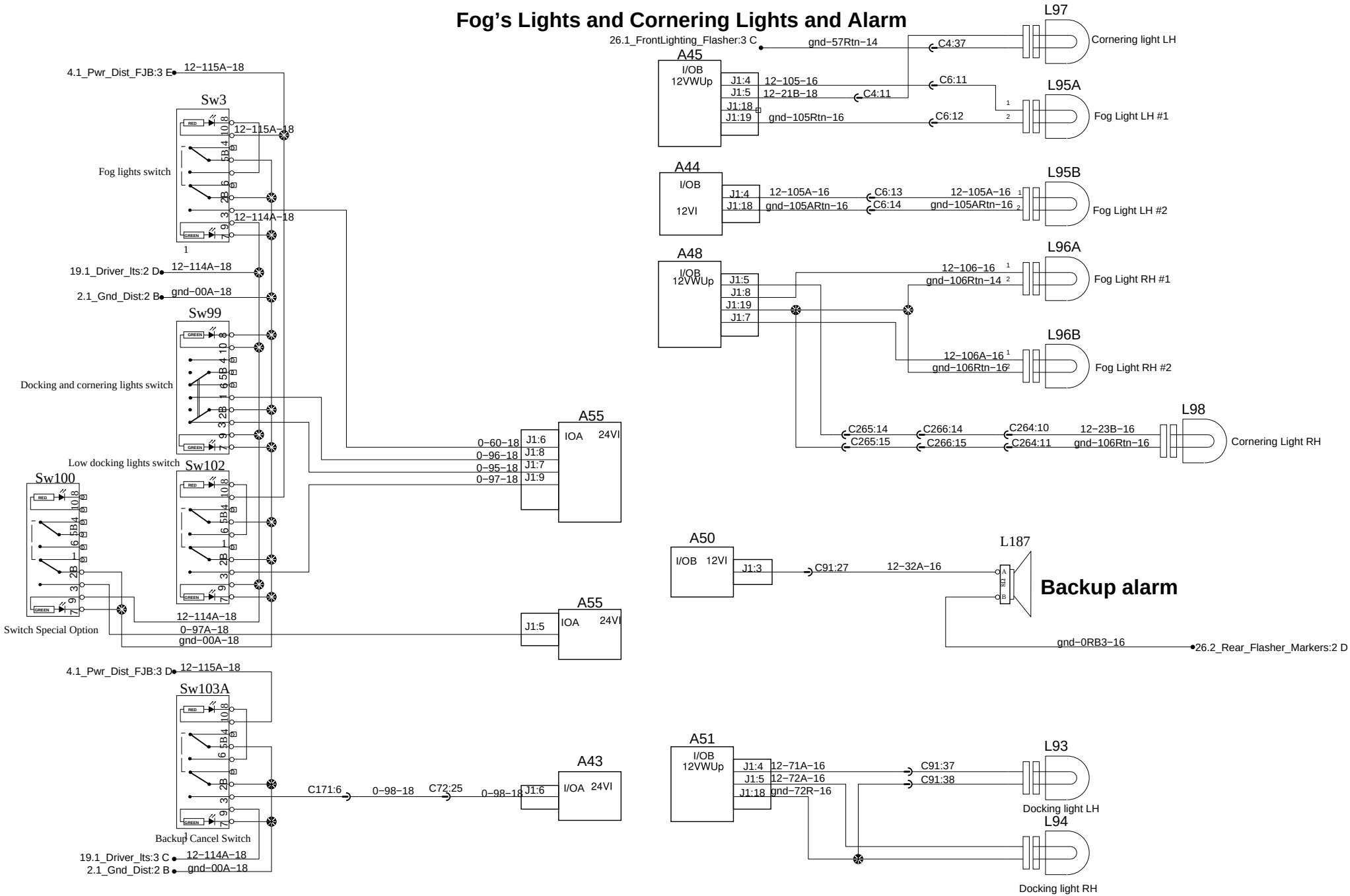

Fog's Lights and Cornering Lights and Alarm

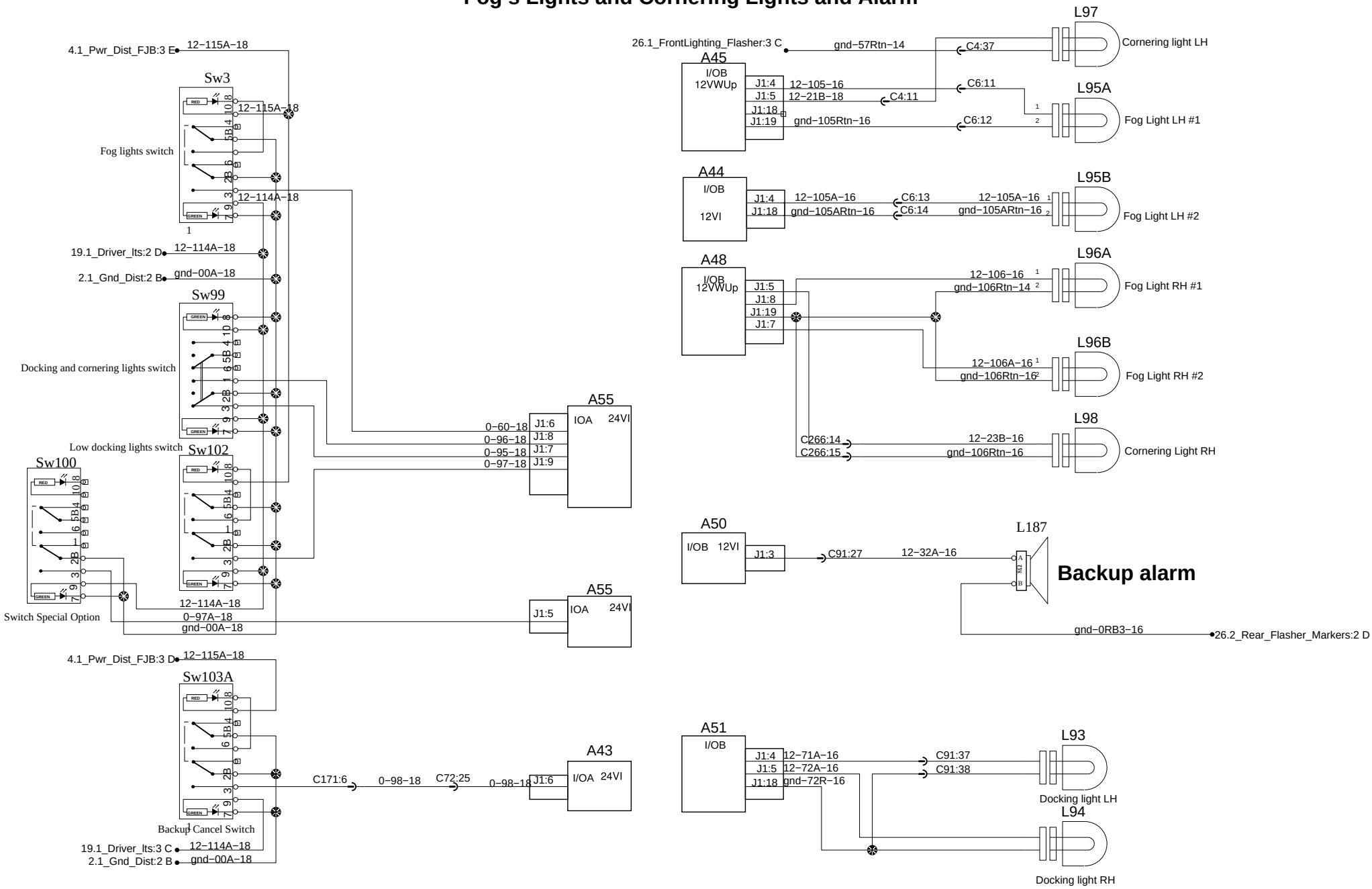

Fog's Lights and Cornering Lights and Alarm

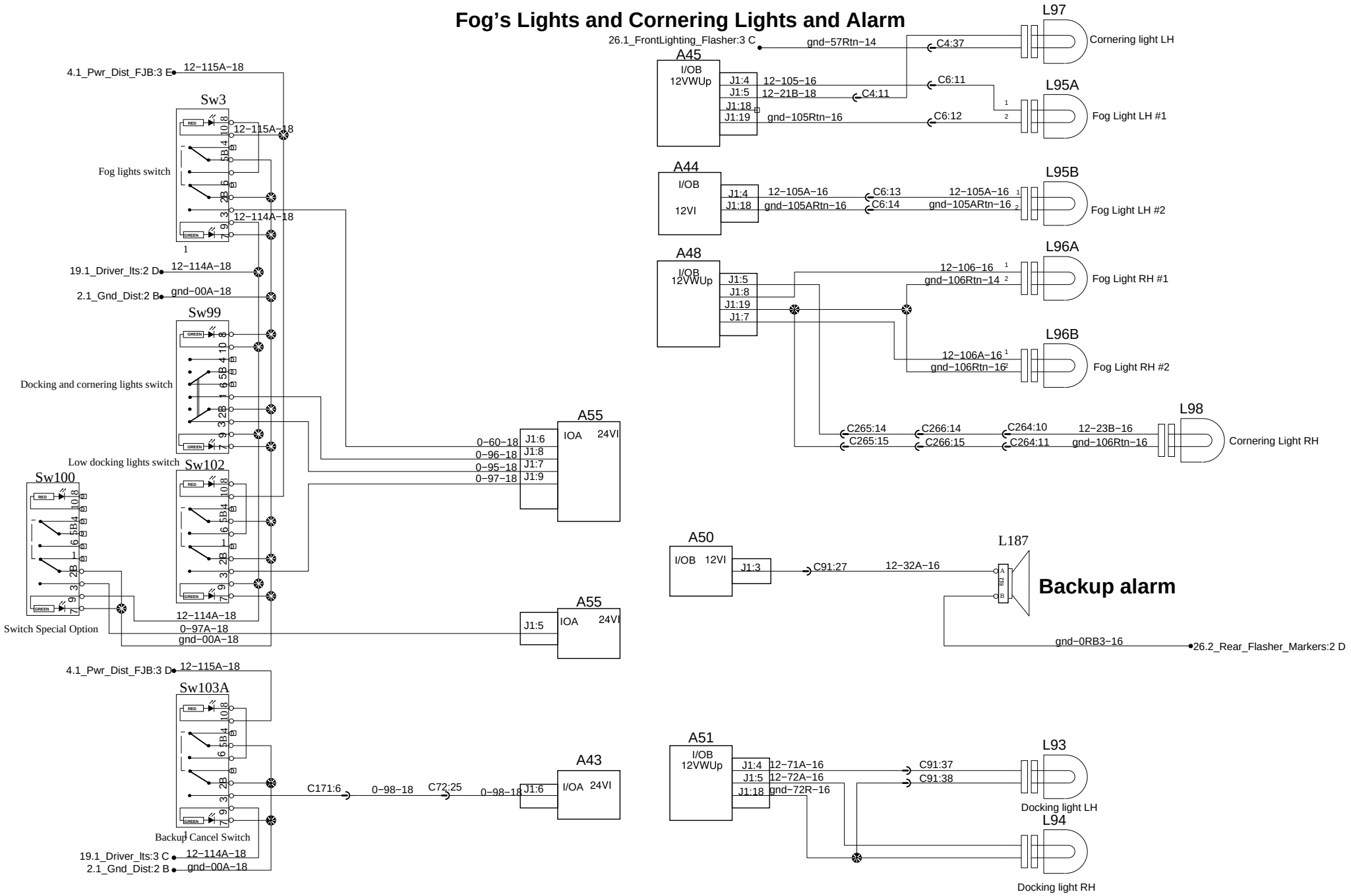

Window Ajar and awning mecanism or Sliding window

L.H.

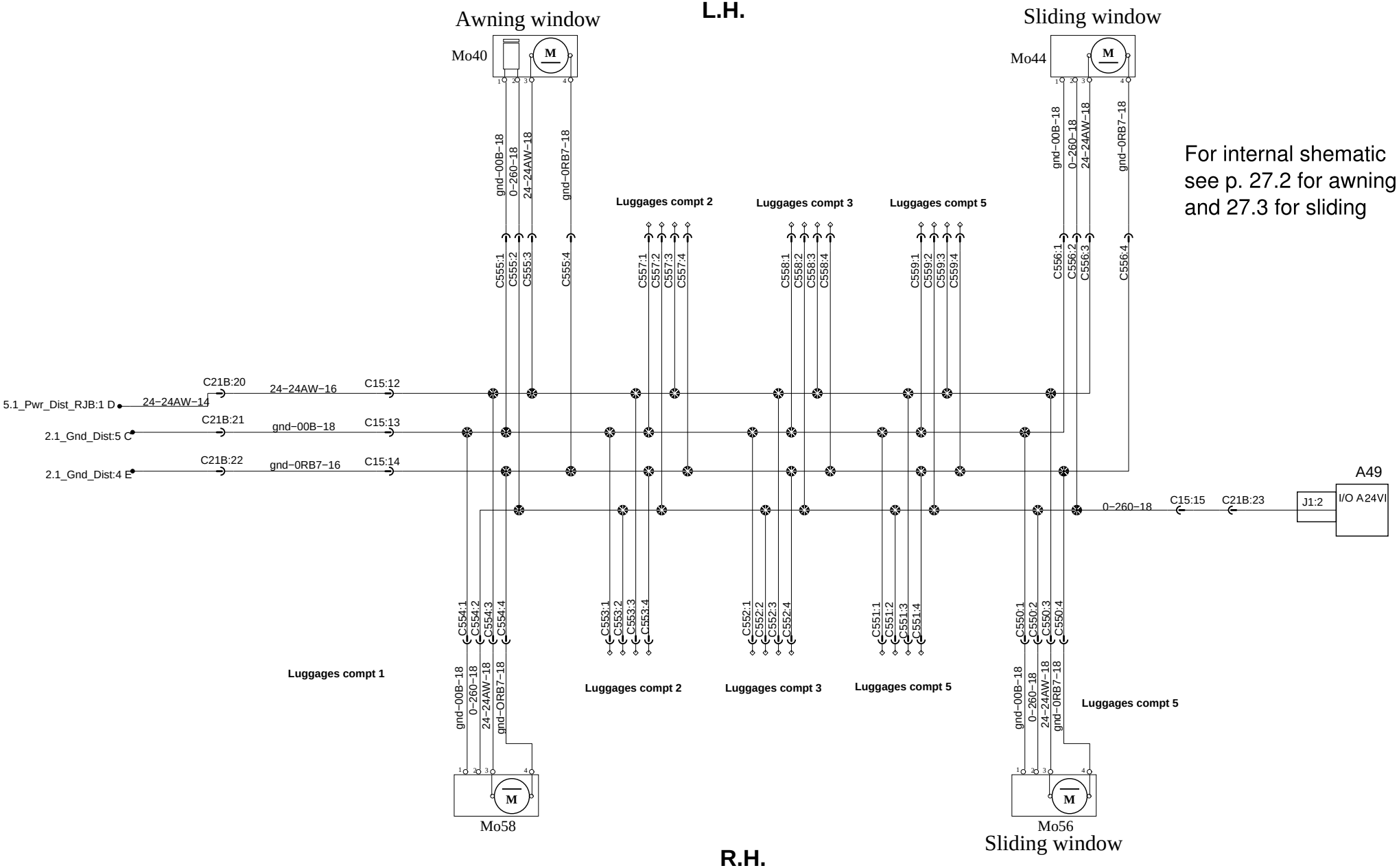

R.H.

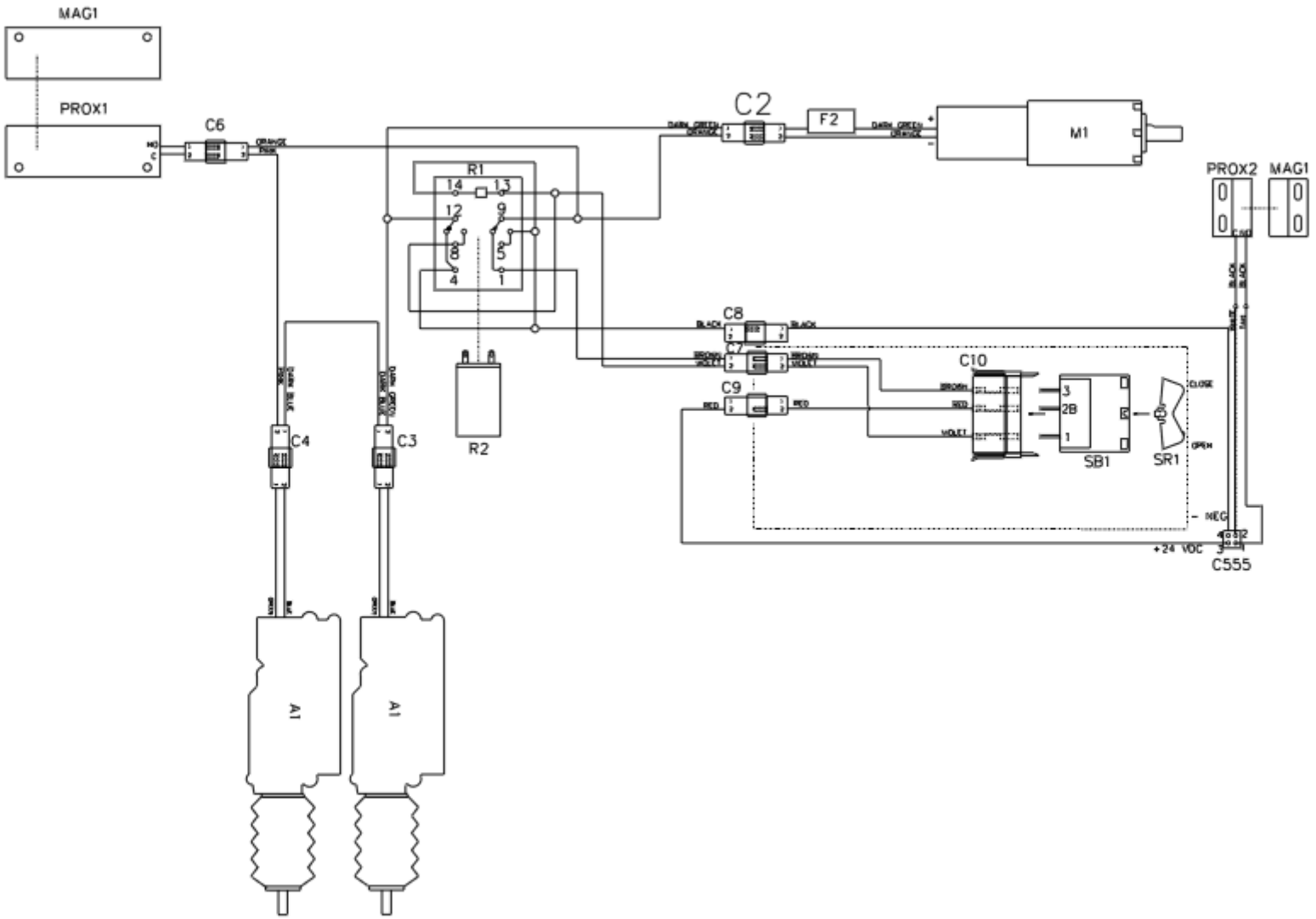

INTERNAL SHEMATIC AWNING WINDOW

PREVOST CAR inc.	WIRING DIAGRAM	NO: D061360	P. 27.2	REVISION 0

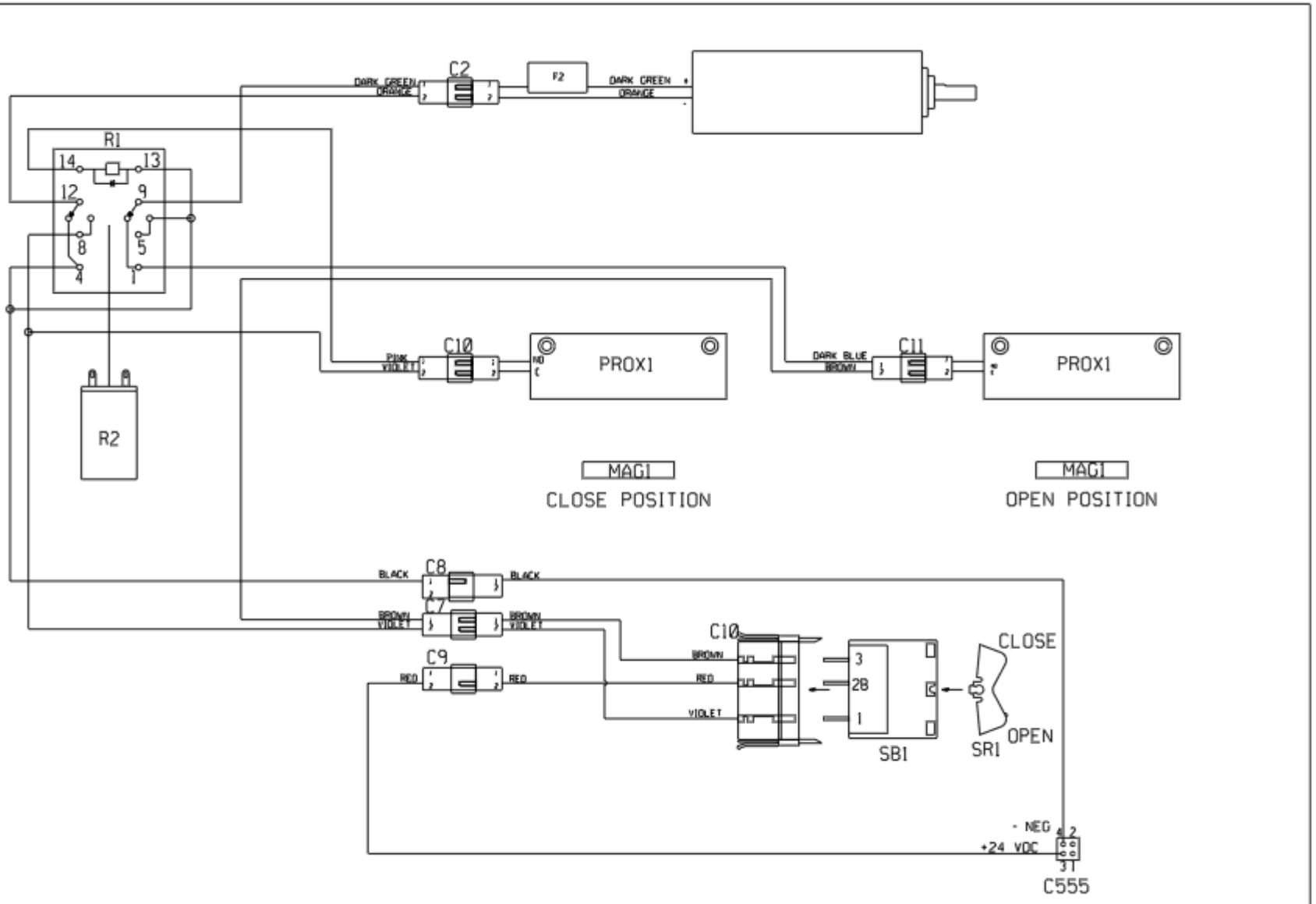

INTERNAL SHEMATIC SLIDING WINDOW

Backup Camera

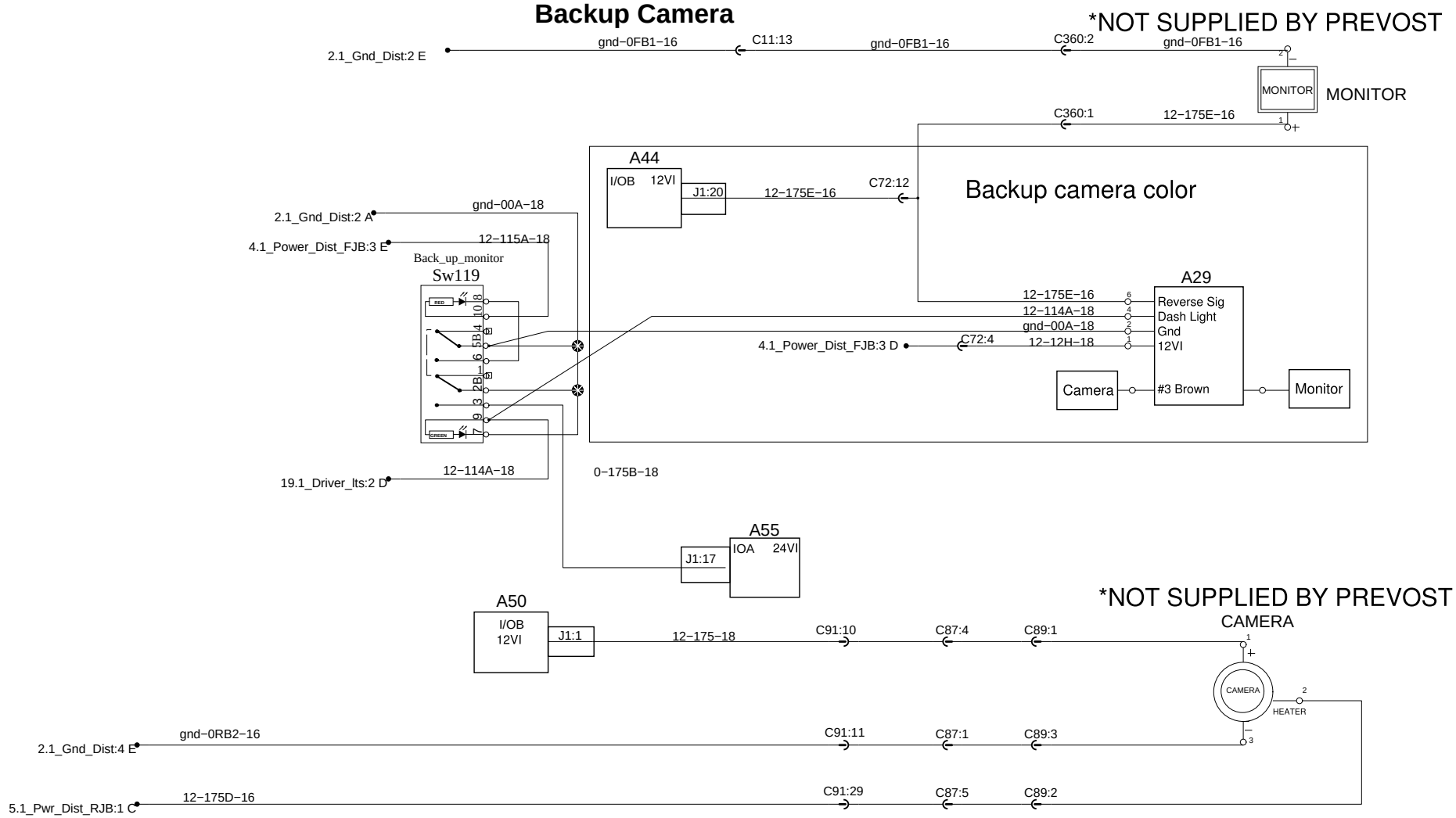

Entrance door,Keyless

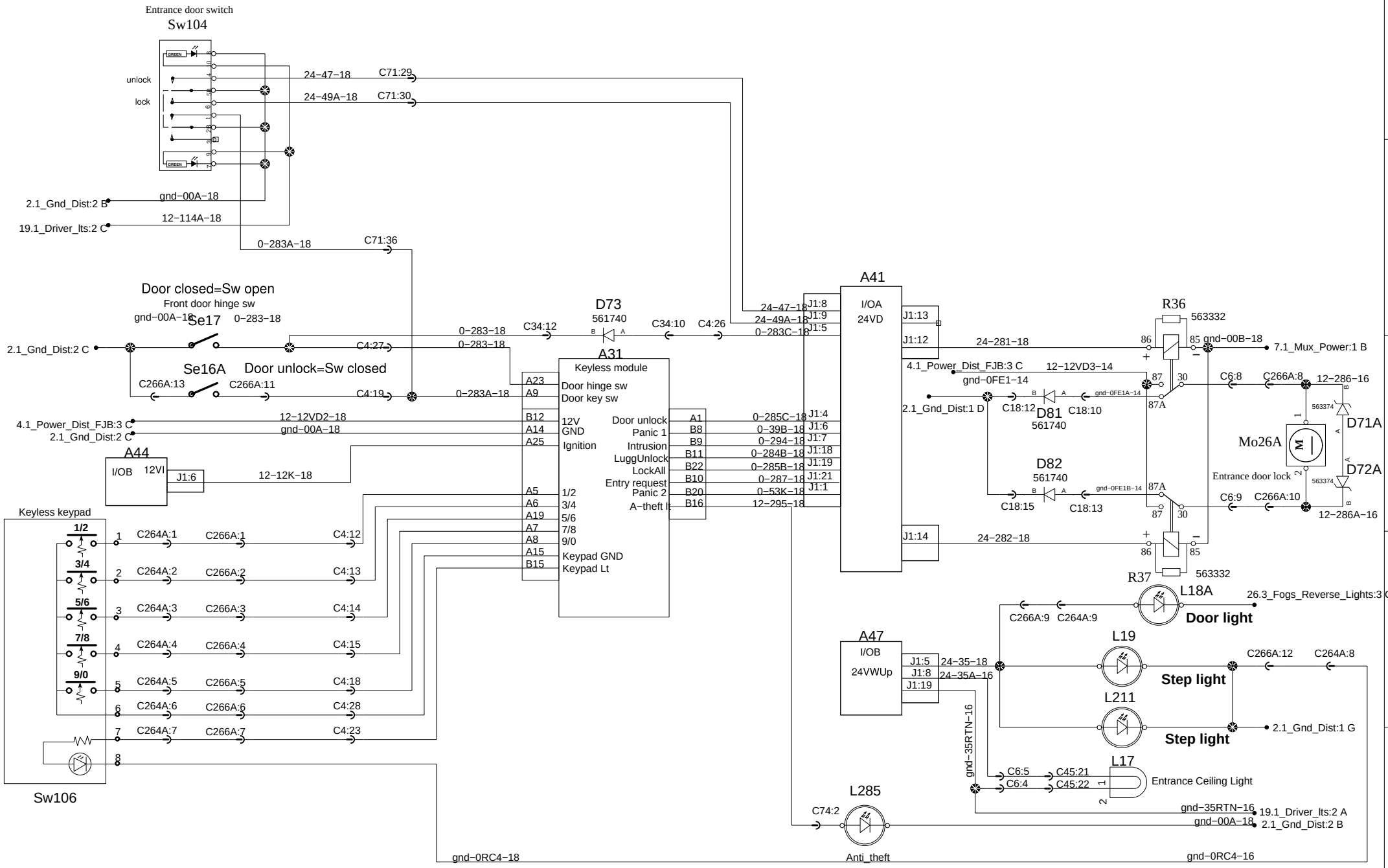

Entrance Door (Keyless Entry System)

x1	x2	x3	y1	y2	y3	y4	y5
1	0	0	1	0	0	0	0
1	0	1	0	1	0	0	0
1	1	0	0	0	1	0	0
0	1	0	0	0	0	1	0
0	0	1	0	0	0	0	1
0	1	1	0	0	0	1	1

SKIM Logic Table (1=Gnd)

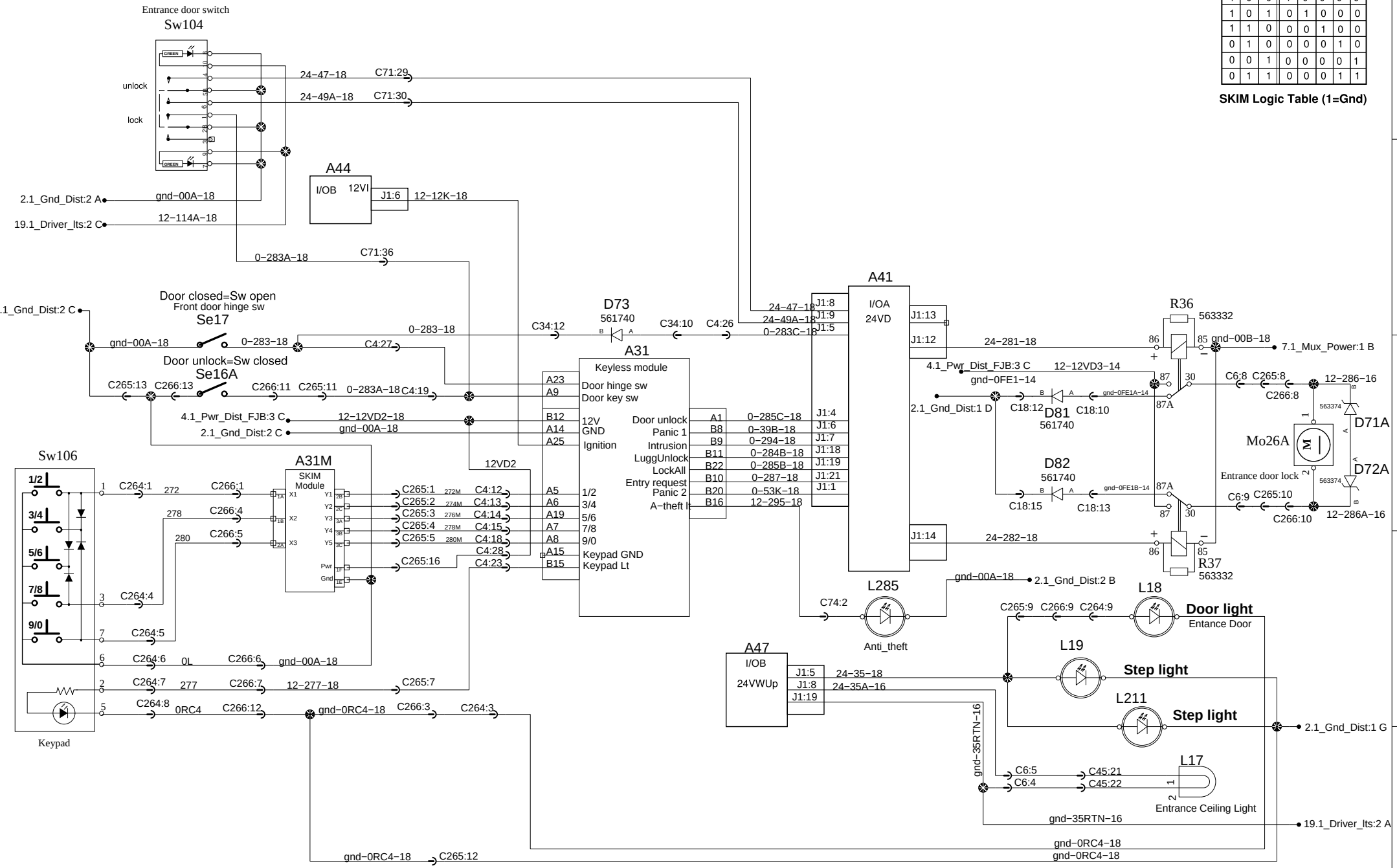

Entrance Door (Keyless Entry System)

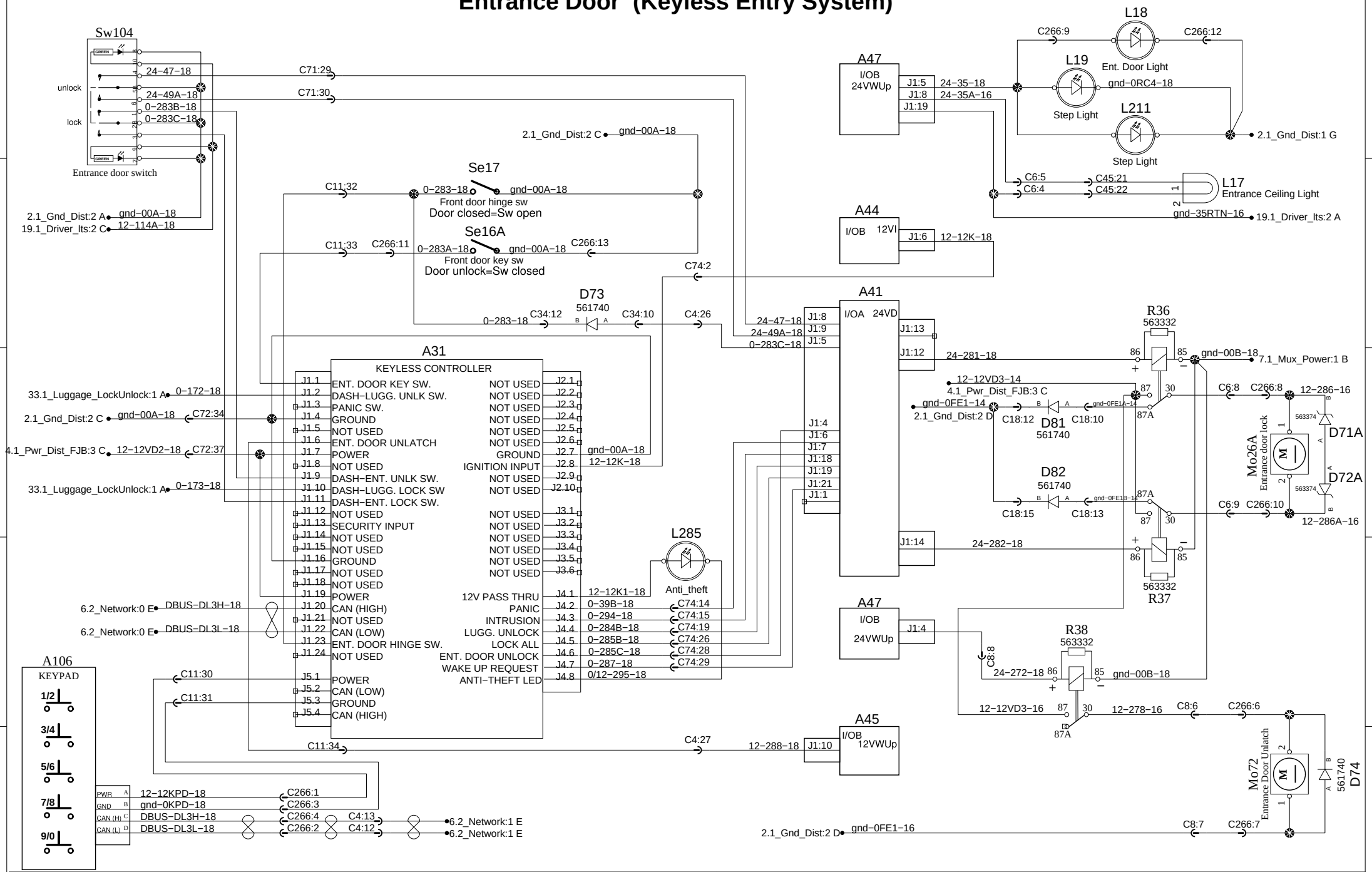

PREVOST®	WIRING DIAGRAM	No:D061360	Page:29.1	Rev:10

Entrance Door (Keyless Entry System)

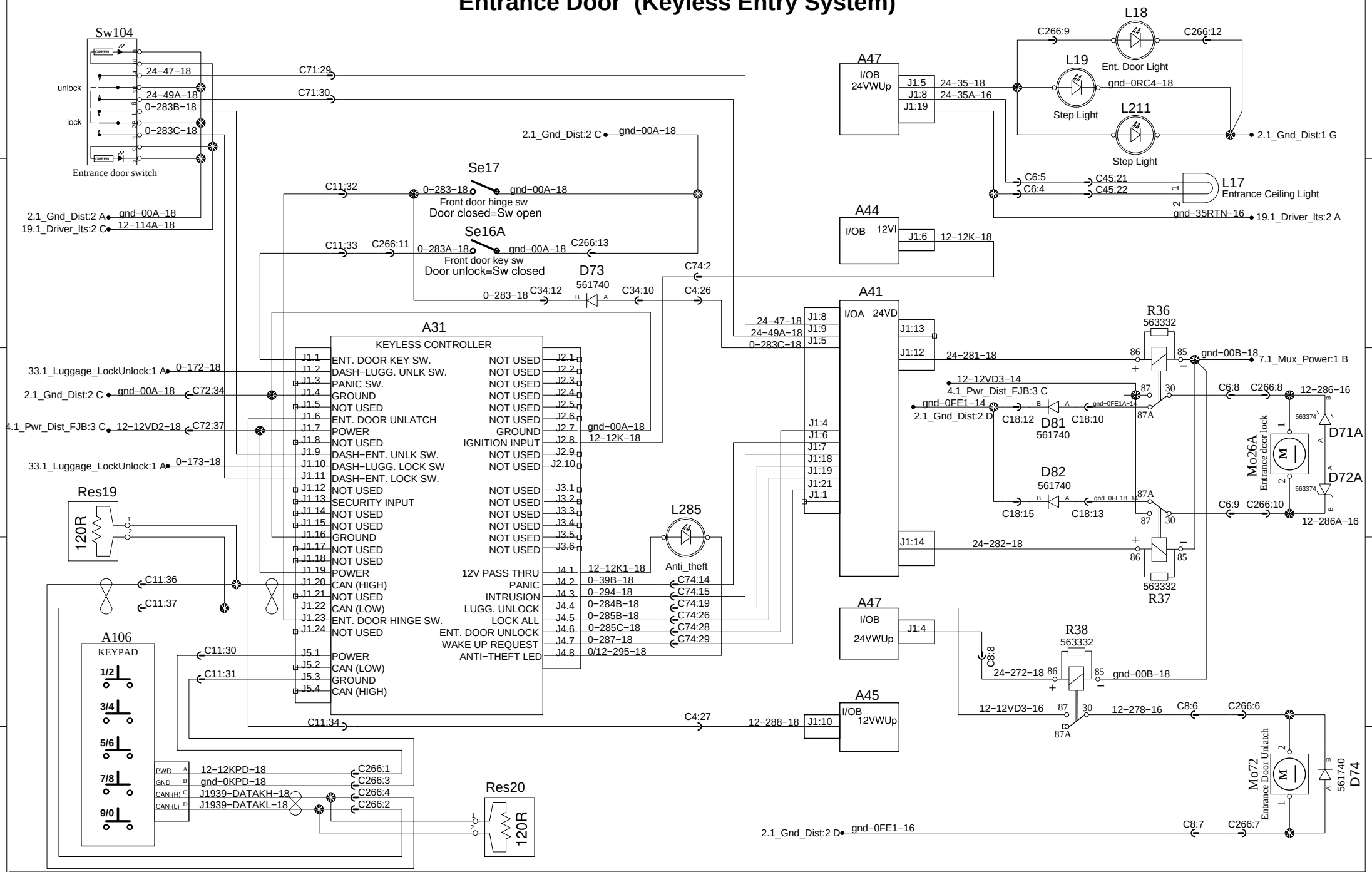

PREVOST®

WIRING DIAGRAM

No:D061360

Page:29.1

Rev:13

Entrance Door (Keyless Entry System)

x1	x2	x3	y1	y2	y3	y4	y5
1	0	0	1	0	0	0	0
1	0	1	0	1	0	0	0
1	1	0	0	0	1	0	0
0	1	0	0	0	0	1	0
0	0	1	0	0	0	0	1
0	1	1	0	0	0	1	1

SKIM Logic Table (1=Gnd)

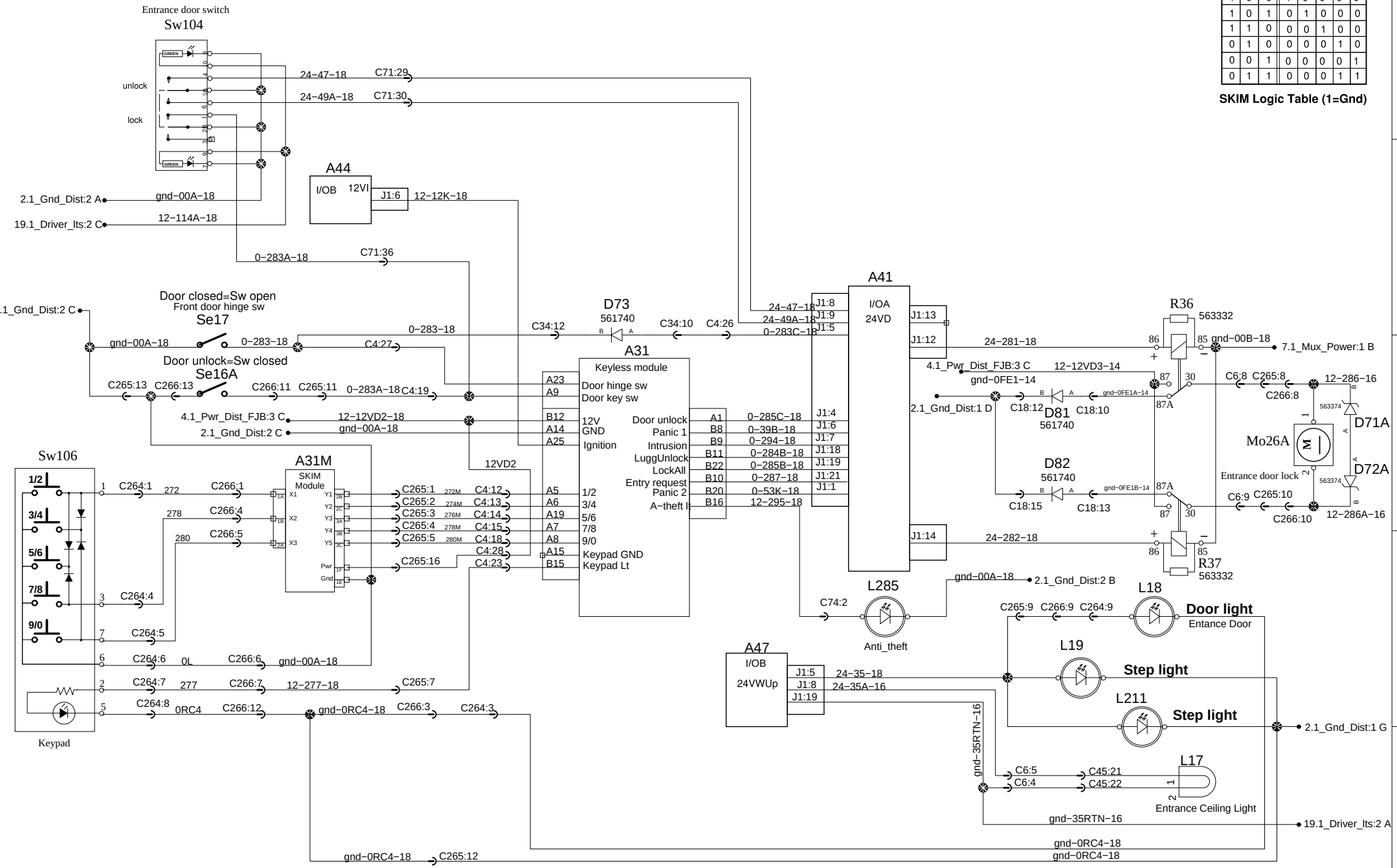

Driver Window and 12V Outlet

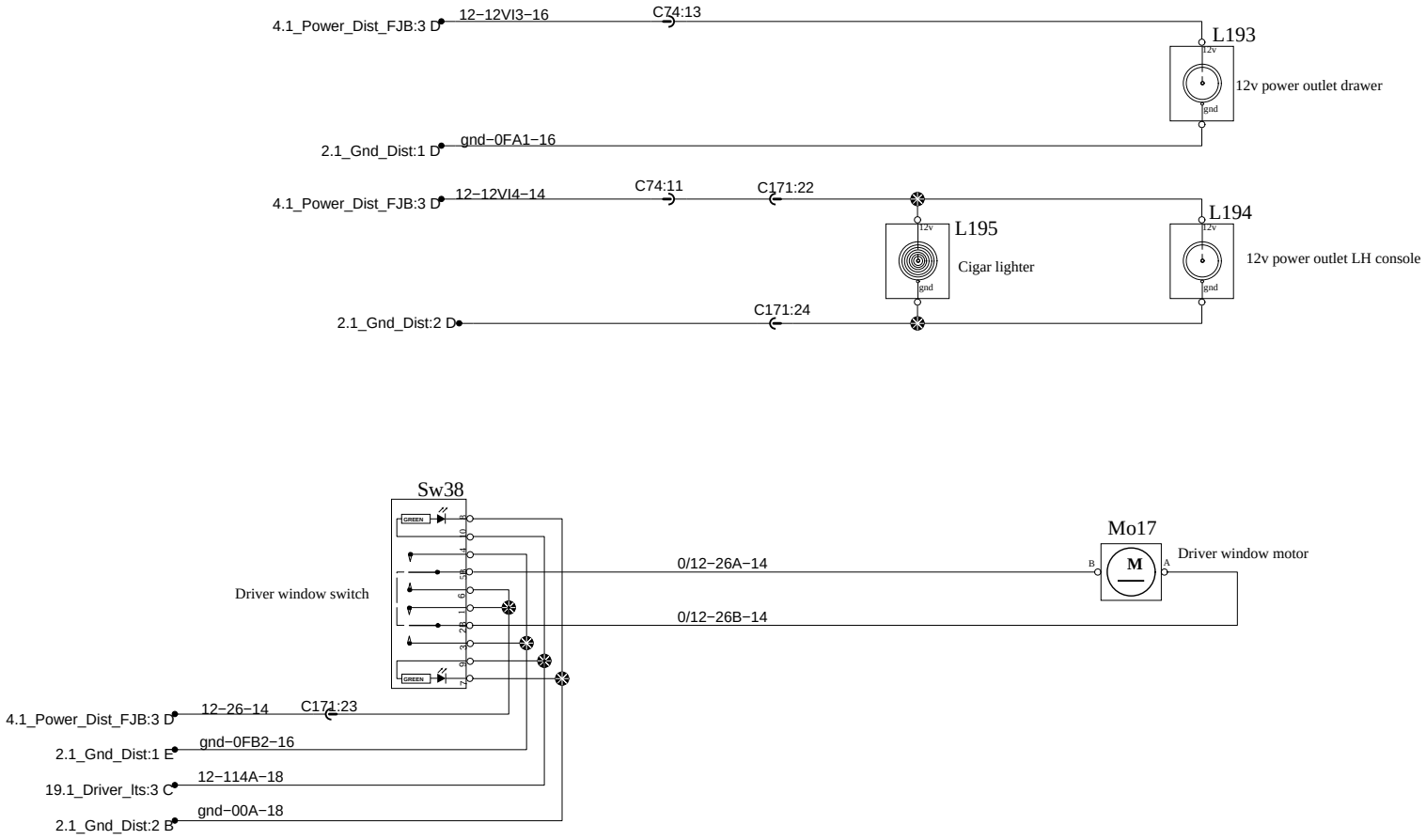

DRIVER SEAT: ELECTRICAL OPTIONS

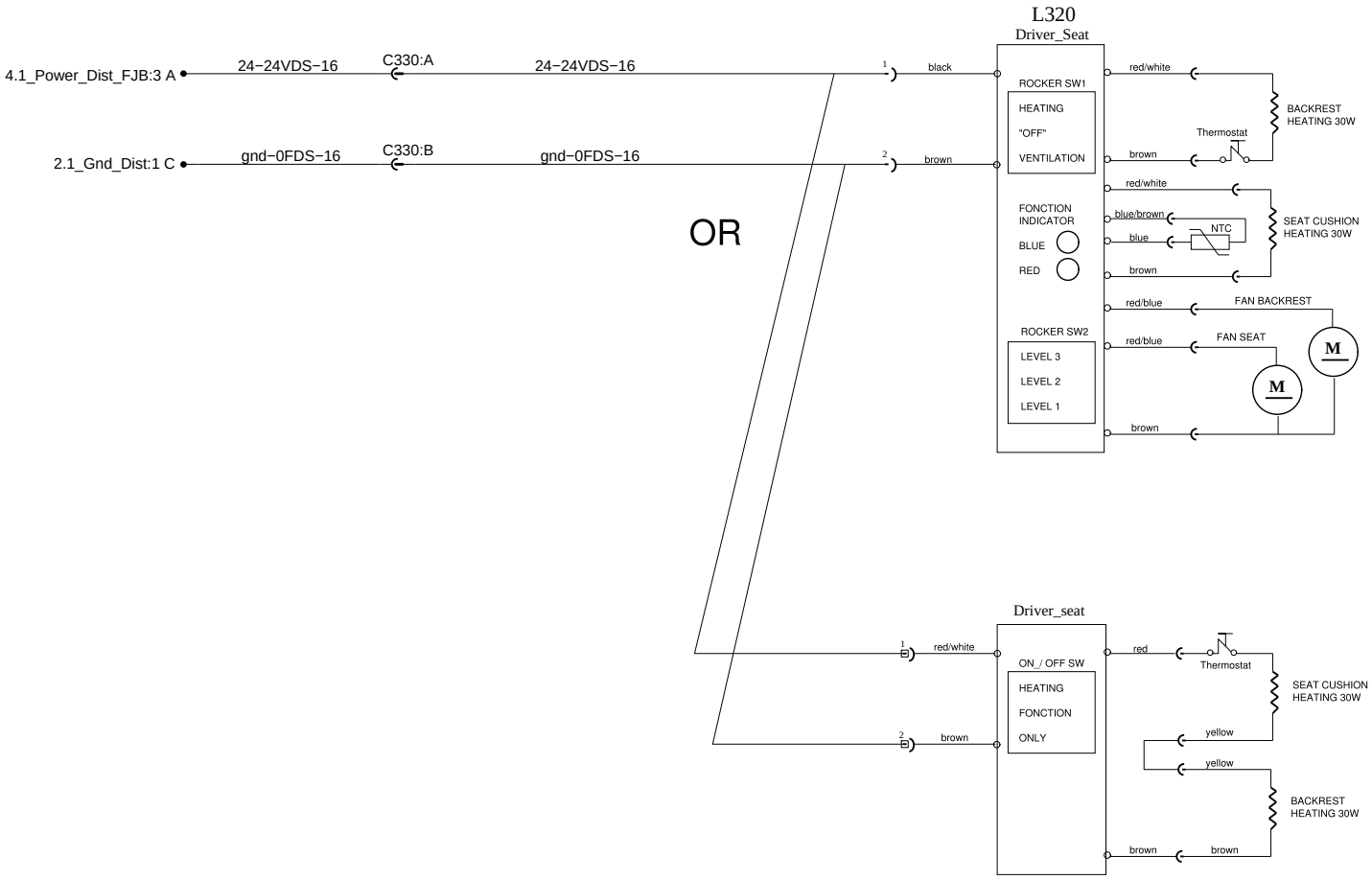

HEATING AND VENTILATION

HEATING ELEMENTS ONLY

Ramco Mirror 2 Adjustment Switch and Heated

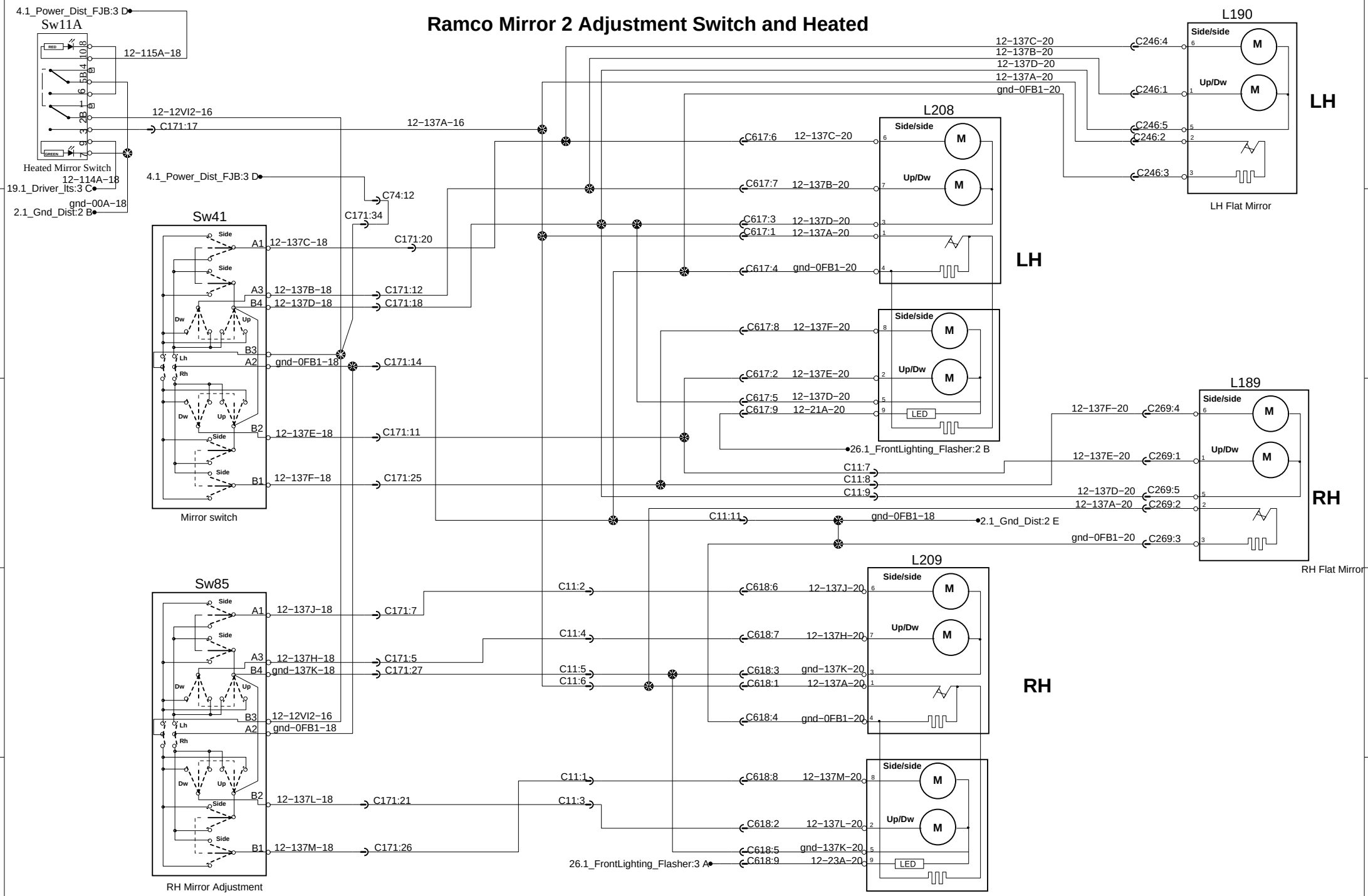

Tag and Level low

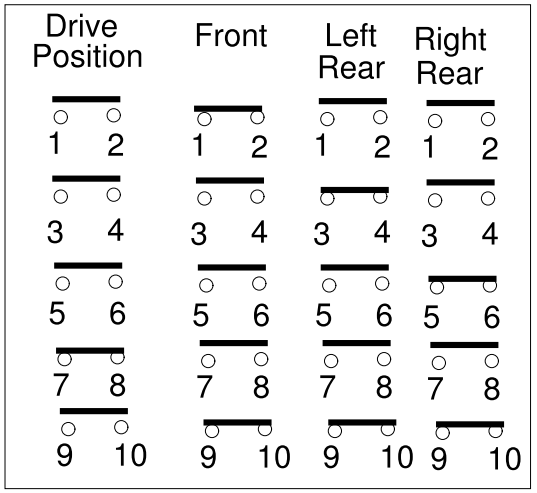

Level low control switch

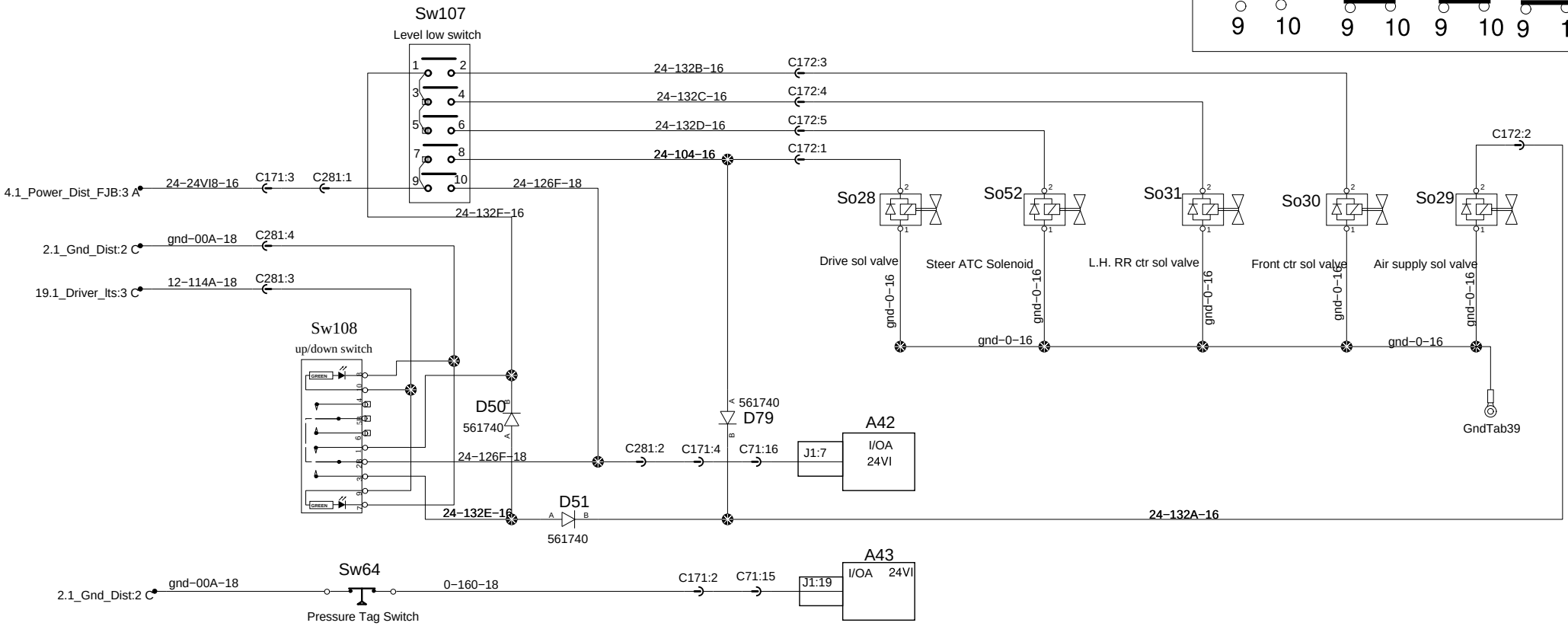

Tag and Level low

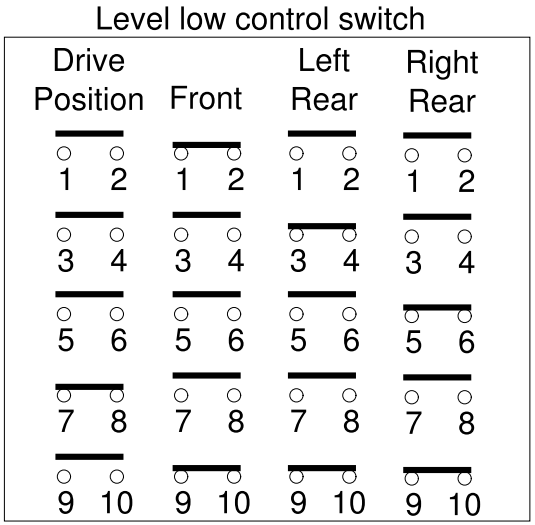

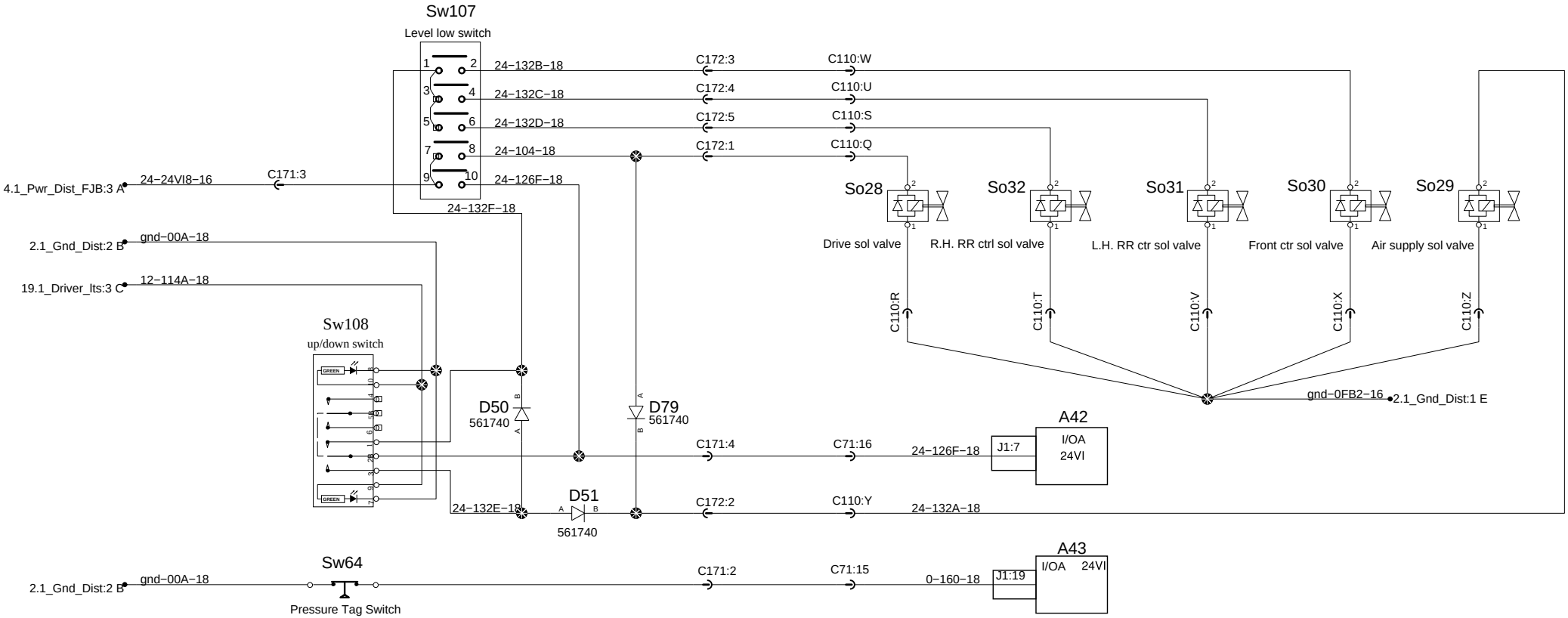

Tag and Level low

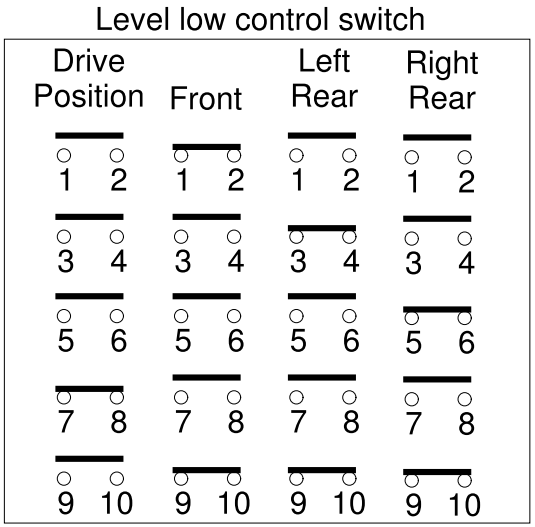

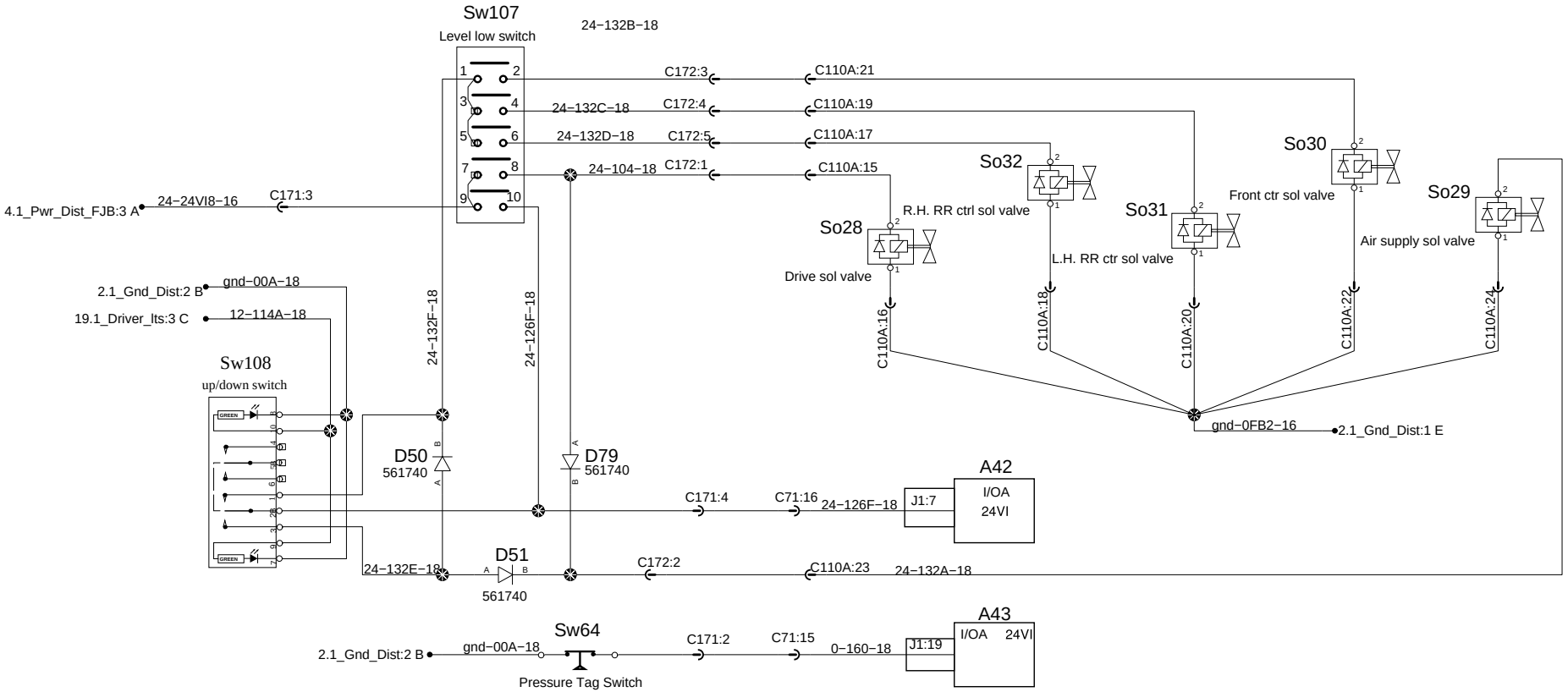

Luggage door Lock/Unlock

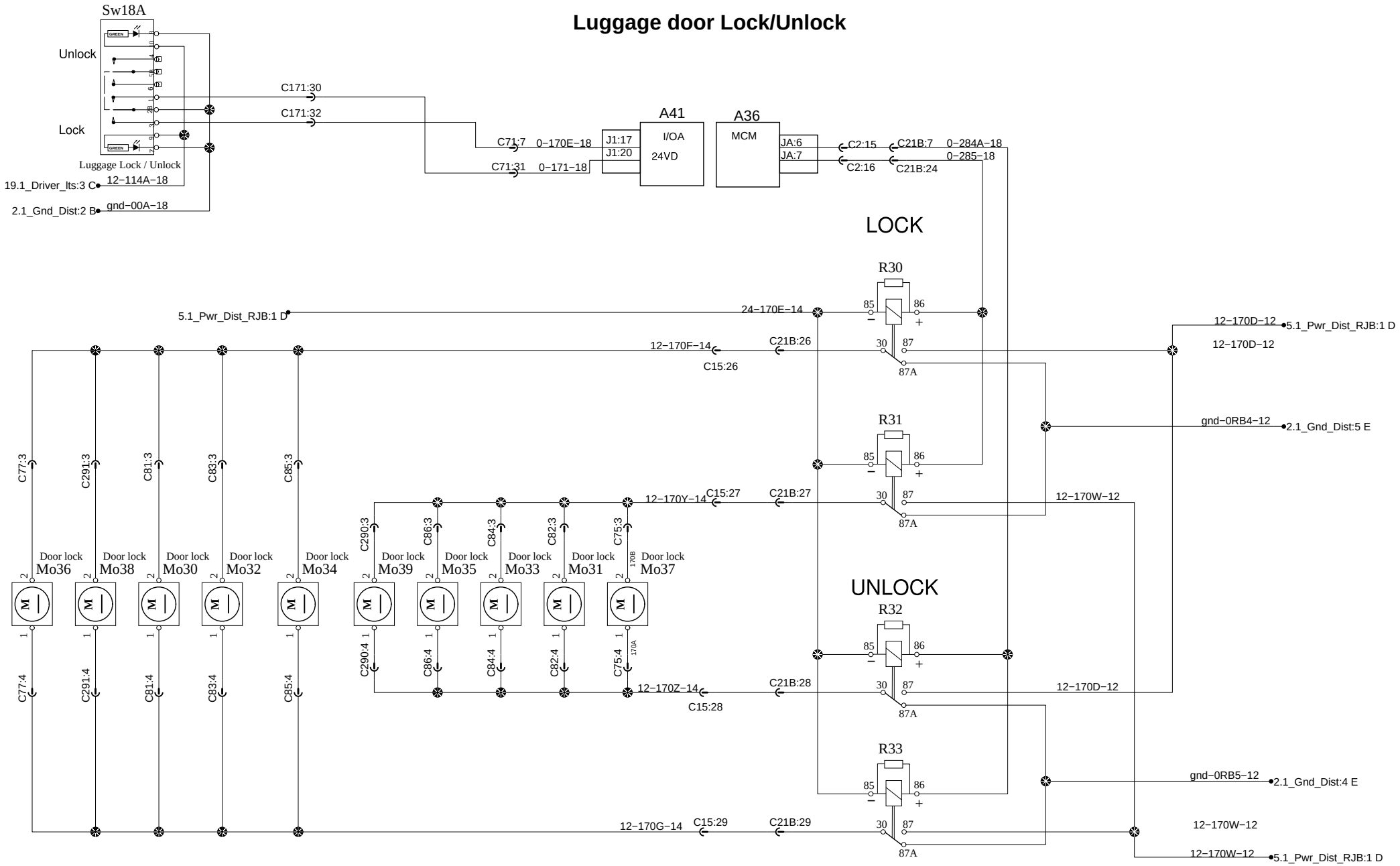

Luggage door Lock/Unlock

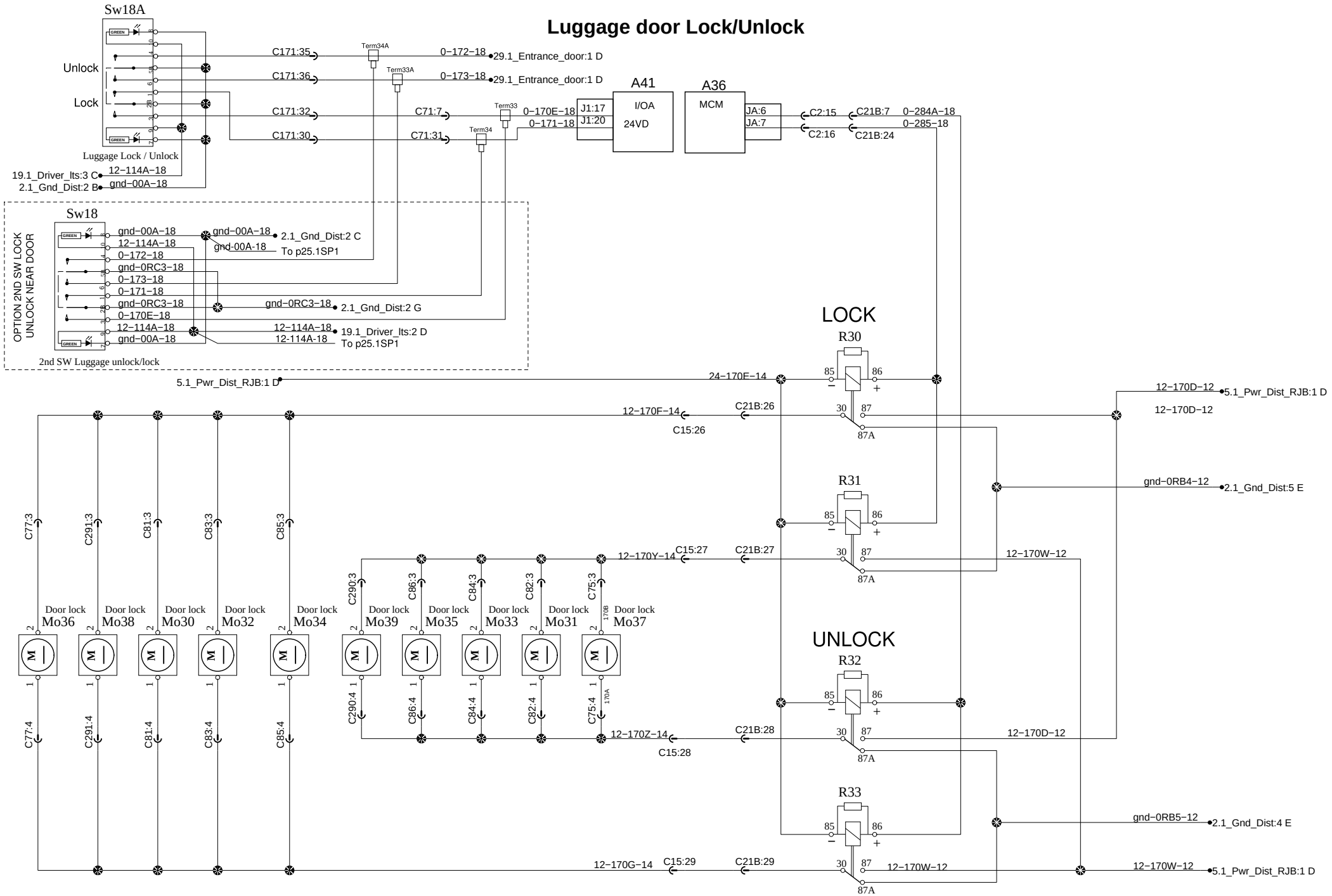

Luggage door Lock/Unlock

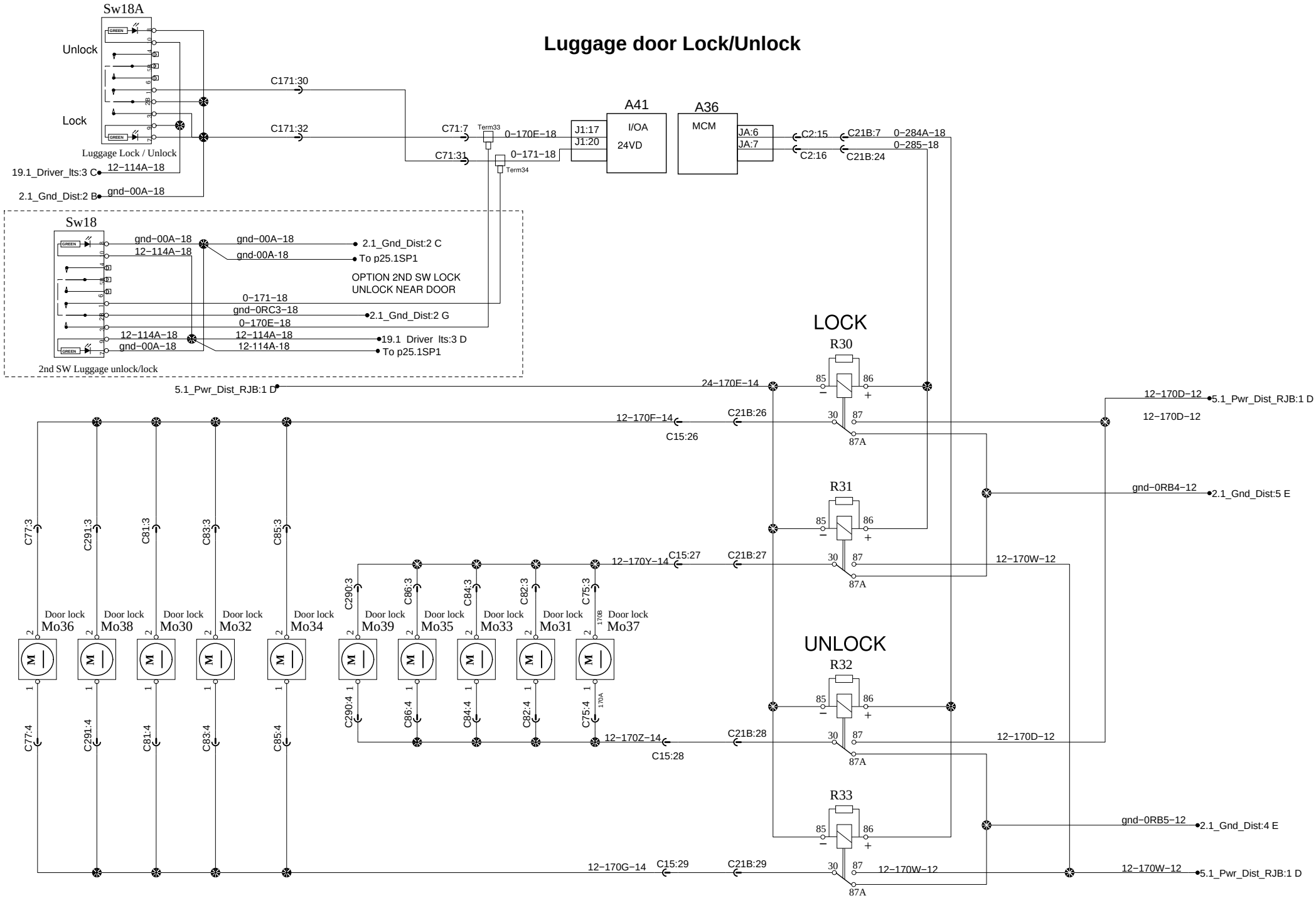

PREVOST®	WIRING DIAGRAM	No:D061360	Page:33.1SP1	Rev:0

Wiper and washer

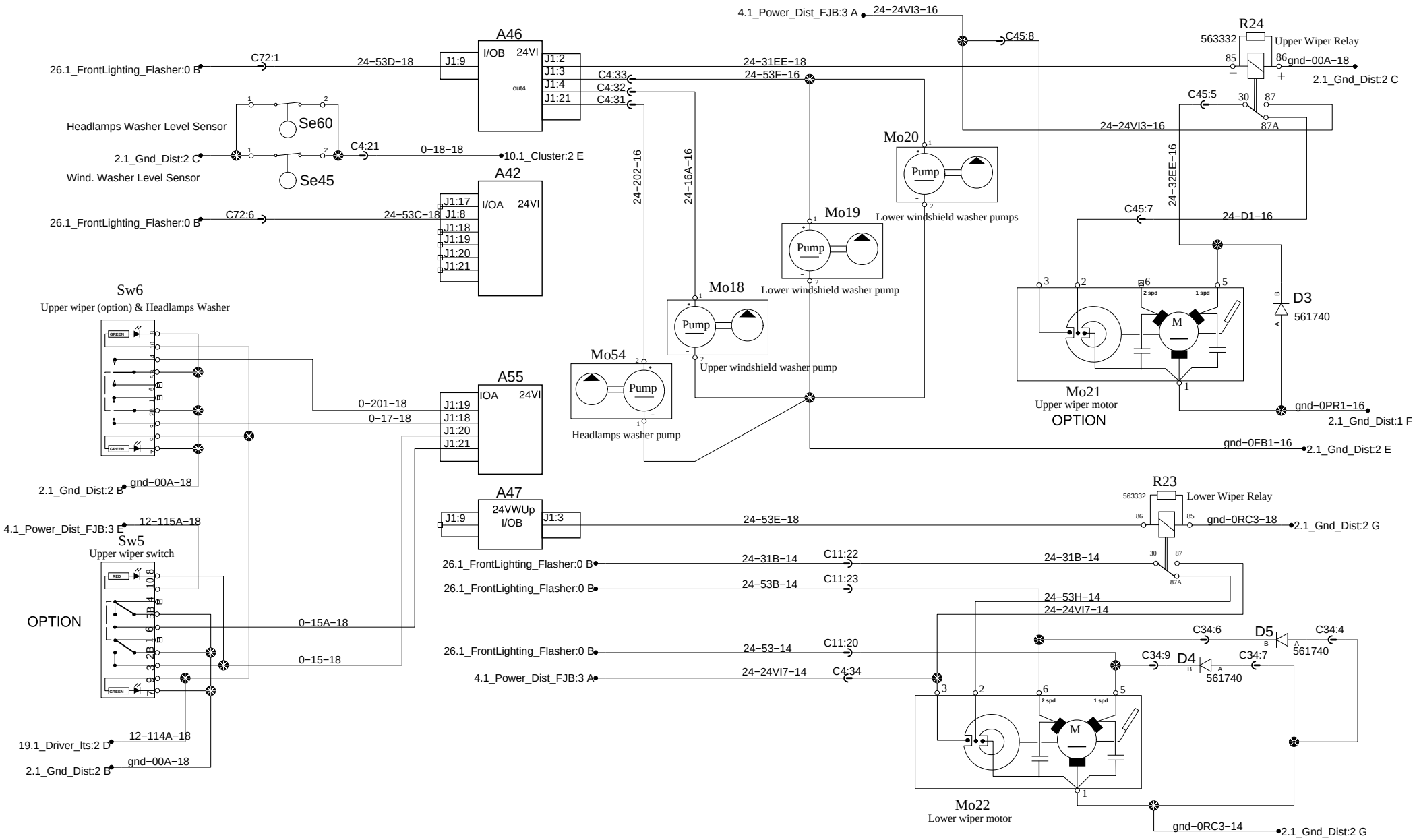

Driver seat

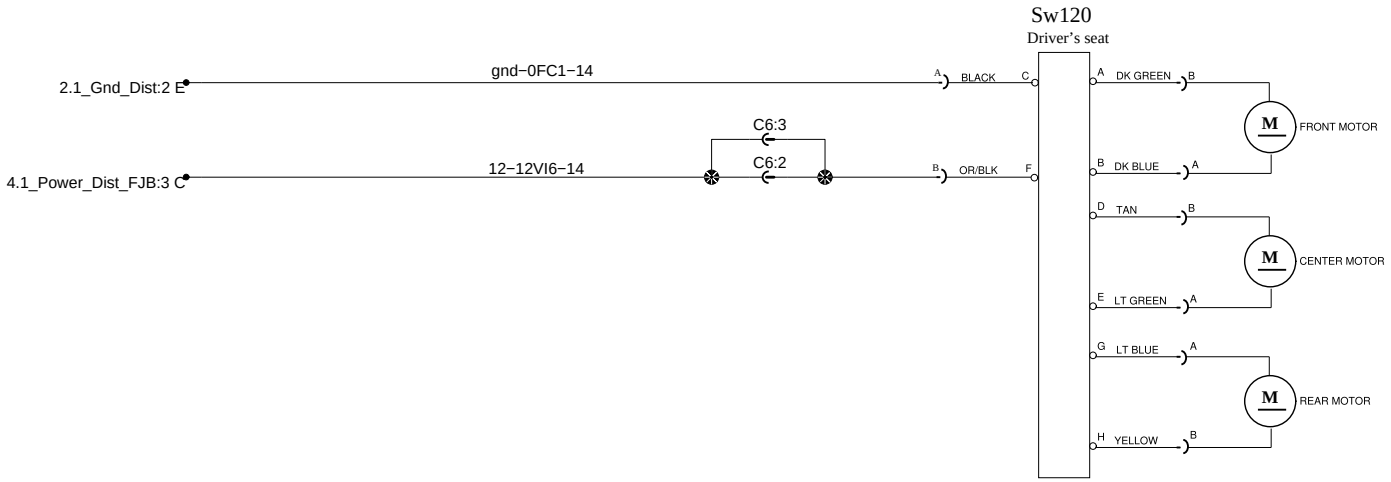
Sw120
Driver's seat
2.1_Gnd_Dist:2 E
gnd−0FC1−14
A BLACK C
4.1_Power_Dist_FJB:3 C
12−12VI6−14
C6:3
C6:2
B OR/BLK F
A DK GREEN B
M
FRONT MOTOR
B DK BLUE A
D TAN B
M
CENTER MOTOR
E LT GREEN A
G LT BLUE A
M
REAR MOTOR
H YELLOW B

Trailer Package

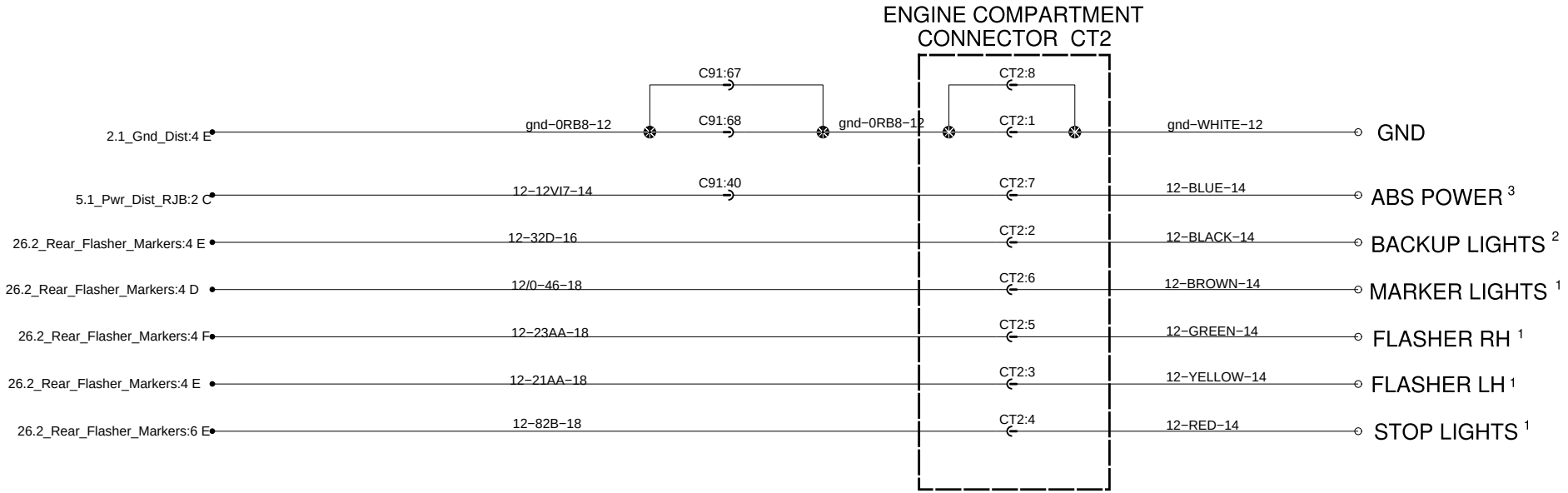

CT2

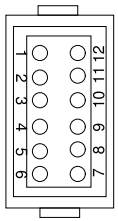

BACK OF CONNECTOR
PREVOST PART 563613
PIN TERMINALS 562481
SECONDARY LOCK 563654

NOTE 1:MAXIMUM CURRENT LOAD IS 8A .

NOTE 2 :MAXIMUM CURRENT LOAD IS 4A .

NOTE 3 :MAXIMUM CURRENT LOAD IS 10A .

Converter interface

Front junction box

CC1 (BLACK)

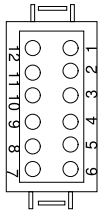

BACK OF CONNECTOR
PREVOST PART 563227
SOCKET TERMINALS 562482
SECONDARY LOCK 563228

CC2 (GREY)

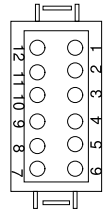

BACK OF CONNECTOR
PREVOST PART 563226
SOCKET TERMINALS 562482
SECONDARY LOCK 563228

INPUTS

CC1

Retract slide out — CC1:1 — 0-CC1-18
Store roof antenna — CC1:2 — 0-CC2-18
House alternator fault — CC1:9 — 0-CC7-18
Awning windows opened — CC1:10 — 0-CC8-18

A43 I/OA 24VI
J1:1 — 0-CC1-18
J1:18 — 0-CC2-18
J1:5 — 0-CC7-18
J1:10 — 0-CC8-18
J1:11 — 24-13-18 — CC2:10 — SLIDE OUT FRONT LEFT IN

Close front bumper — CC1:3 — 0-CC3-18
Store side awning — CC1:4 — 0-CC4-18

A46 I/OB 24VI
J1:10 — 0-CC3-18
J1:11 — 0-CC4-18

Generator problem — CC1:5 — 0-CC5-18
Shore power cord — CC1:8 — 0-CC6-18

A42 I/OA 24VI
J1:5 — 0-CC5-18
J1:6 — 0-CC6-18
J1:11 — 24-CC12-18 — CC2:5 — IGNITION
J1:12 — 24-CC14-18 — CC2:6 — ENGINE RUN
J1:13 — 24-12-18 — CC2:9 — SLIDE OUT REAR LEFT IN
J1:14 — 24-31-18 — CC2:7 — SLIDE OUT FRONT RIGHT IN
J1:16 — 24-32-18 — CC2:8 — SLIDE OUT REAR RIGHT IN

37.1_Steering_DiffLock_TGW:2 C — data-16-18 — CC2:11 — TRANSMISSION SPEED

A41 I/OA 24VD
J1:11 — 24-CC13-18 — CC2:1 — WAKE UP IGNITION
J1:15 — 24-CC17-18 — CC2:4 — PARK BRAKE
J1:30 — 24-CC16-18 — CC2:3 — NEUTRAL

OUTPUTS

CC2

A36 MCM 24VD
JA:11 — 24-CC15-18 — CC2:2 — REVERSE GEAR
JA:19 — data-SP-18 — CC2:12 — VEHICLE SPEED

38.1_Steering_Multifunction:3 E — 24-297-14 — CC1:6
38.1_Steering_Multifunction:3 E — 24-298-14 — CC1:7

TYPICAL CIRCUIT

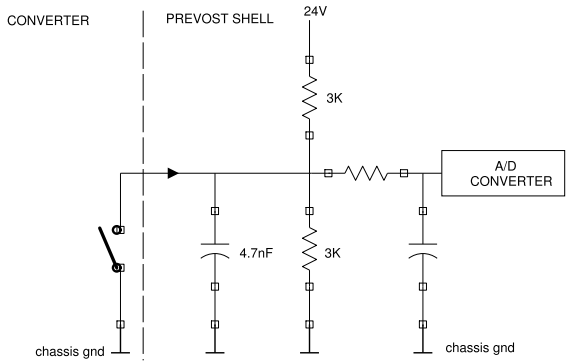

INPUT SPECIFICATION

Active state (input contact closed):

Sourcing current : 8mA
Maximum allowed voltage drop across contact: 3V

Inactive state(input contact open):

Voltage on input:12V
Maximum allowed leakage current across contact: 3ma

OUTPUT SPECIFICATION

Active state

Maximum current: 1A
Minimum output voltage: 22.5V

Inactive state

Open circuit voltage: 8V
Leakage current: 0.8ma

TYPICAL CIRCUIT

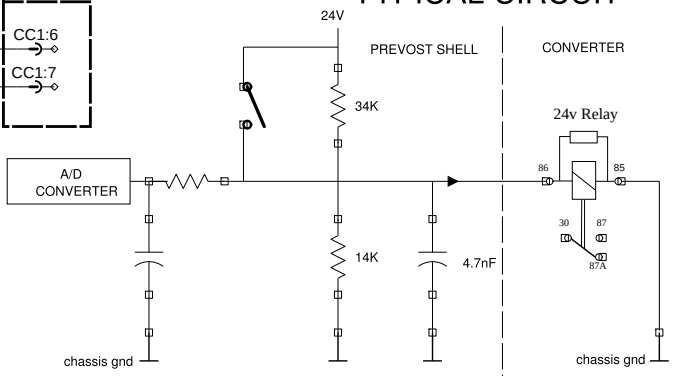

Volvo Link TGW

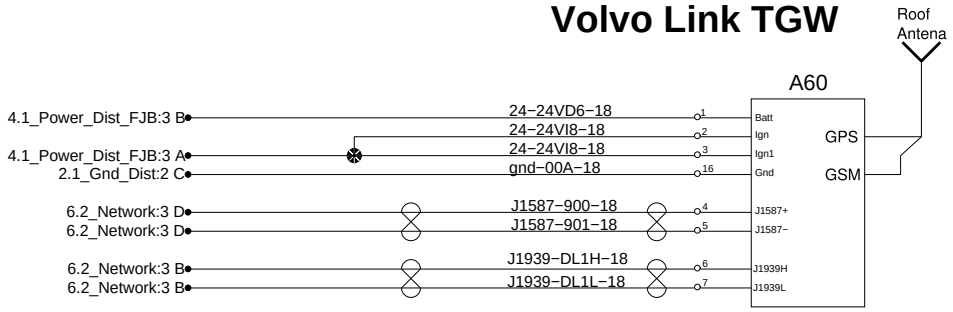

ZF Variable Steering Control

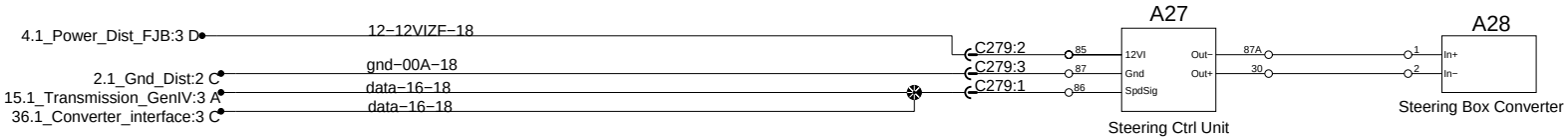

DIFFERENTIAL LOCK < 5 MPH

option (not installed)

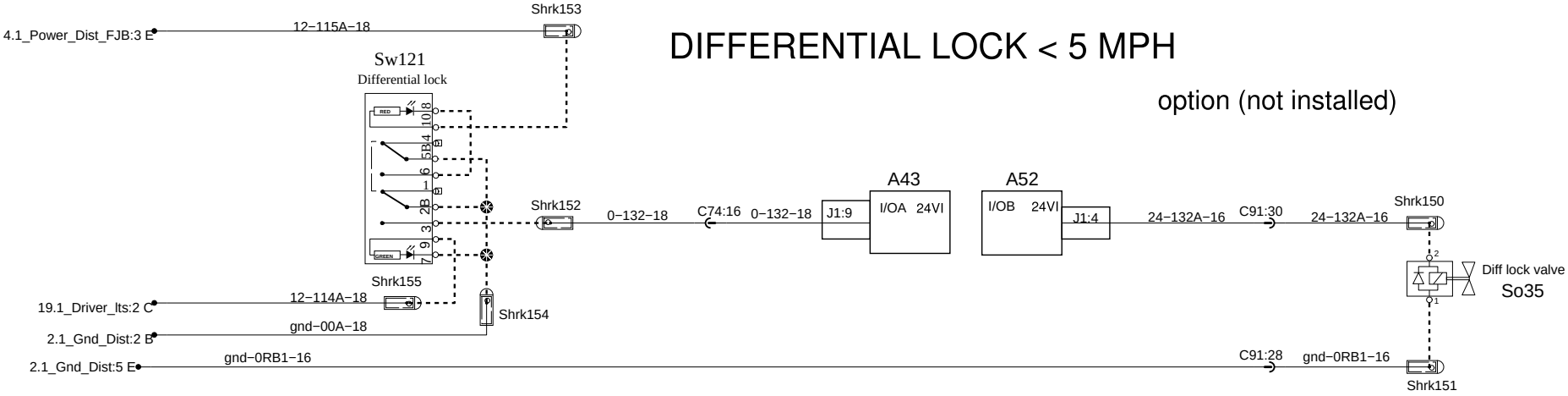

VOLVO LINK TGW

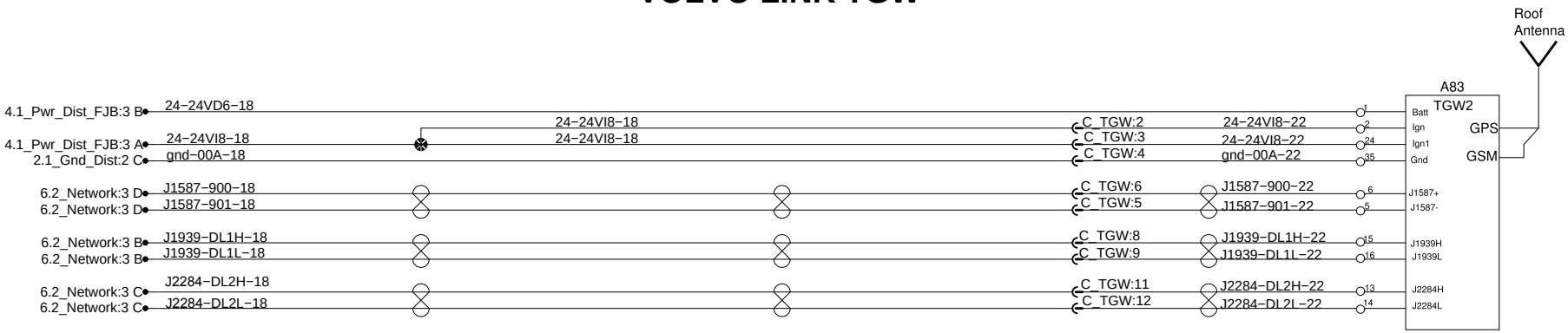

ZF VARIABLE STEERING CONTROL

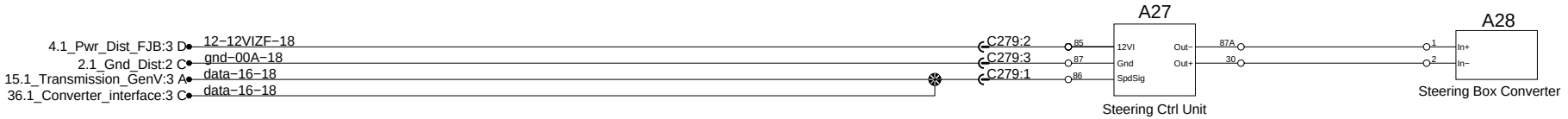

DIFFERENTIAL LOCK < 5 MPH

option (not installed on std vehicles)

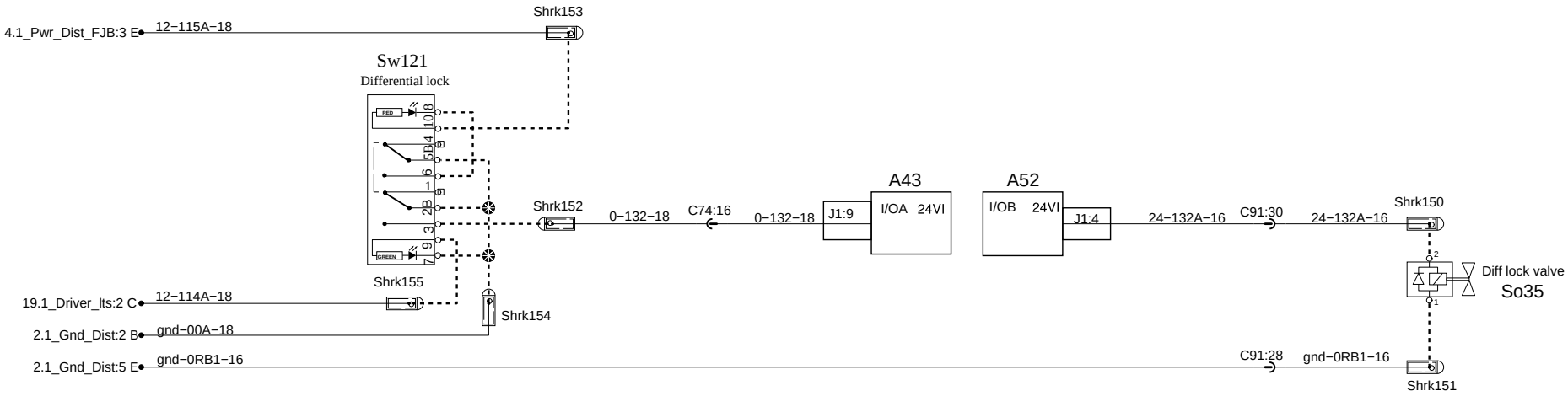

VOLVO LINK TGW

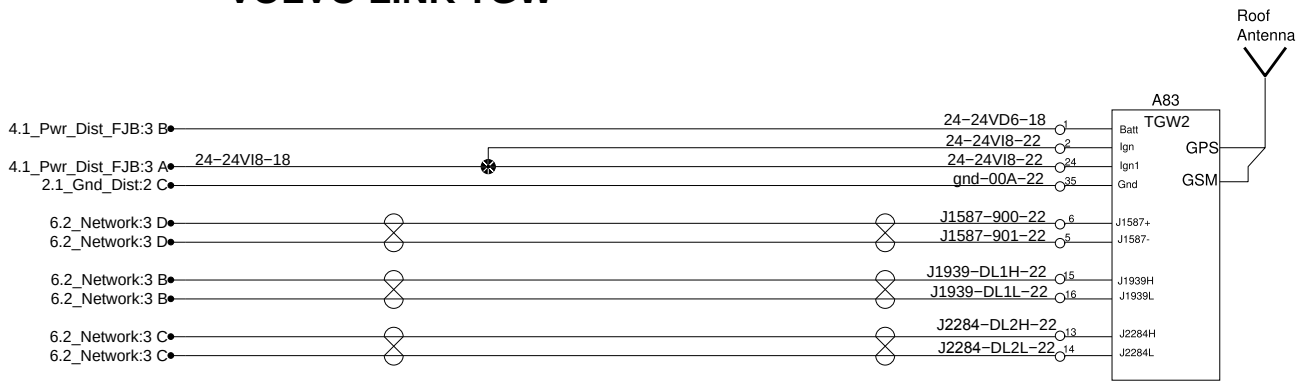

ZF VARIABLE STEERING CONTROL

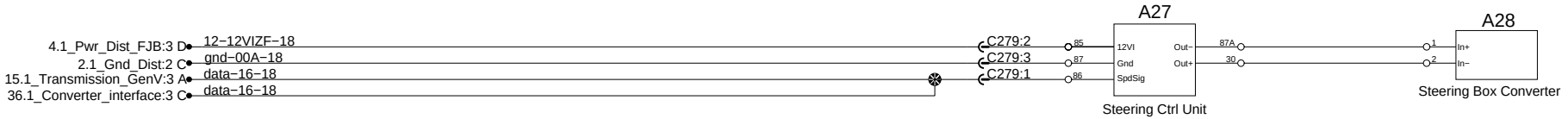

DIFFERENTIAL LOCK < 5 MPH

option (not installed on std vehicles)

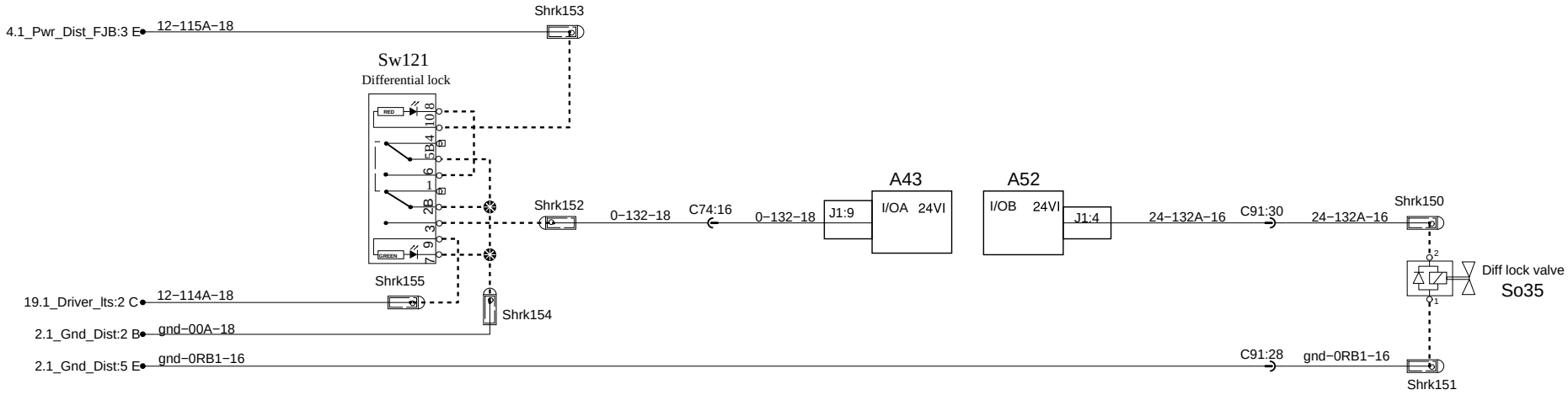

Air Dryer

Electric Heater Only

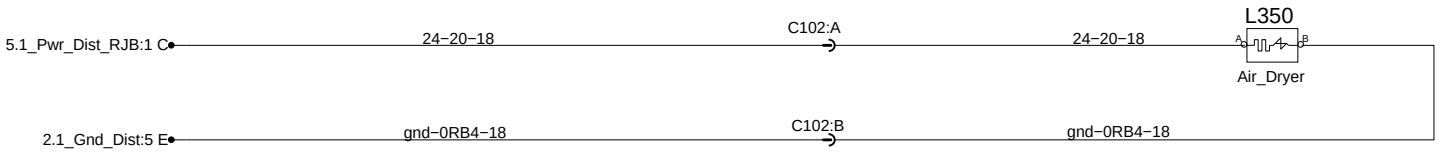

Electric Control And Heater

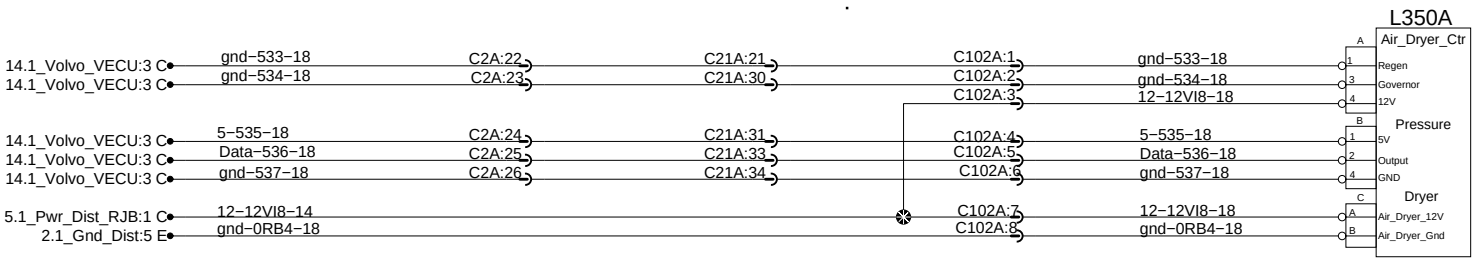

Air Dryer Heater Only

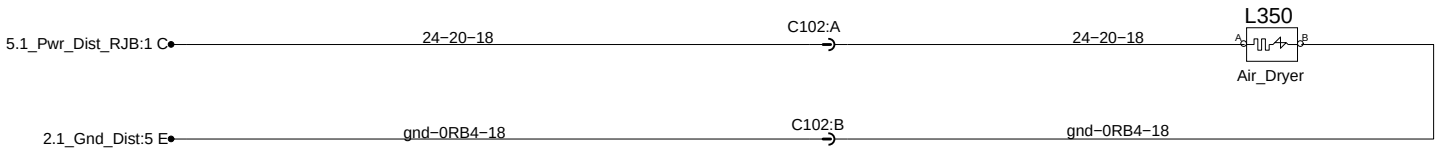

Air Dryer Electric Control And Heater

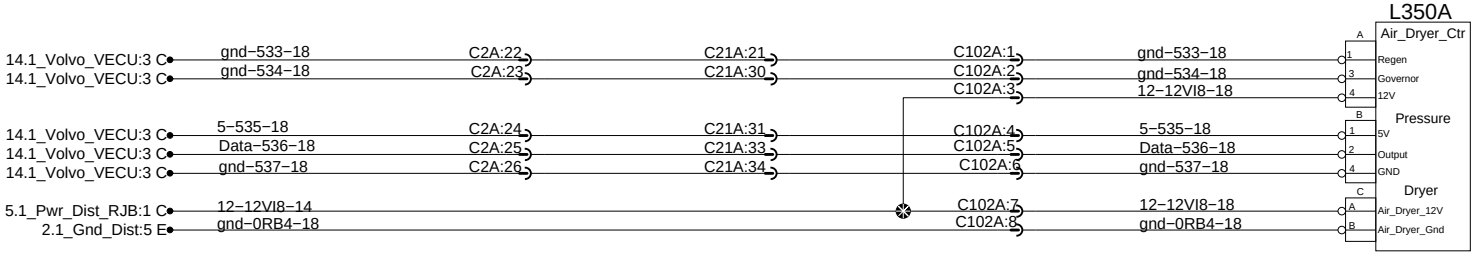

Steering Multifunctions & Sun Visor

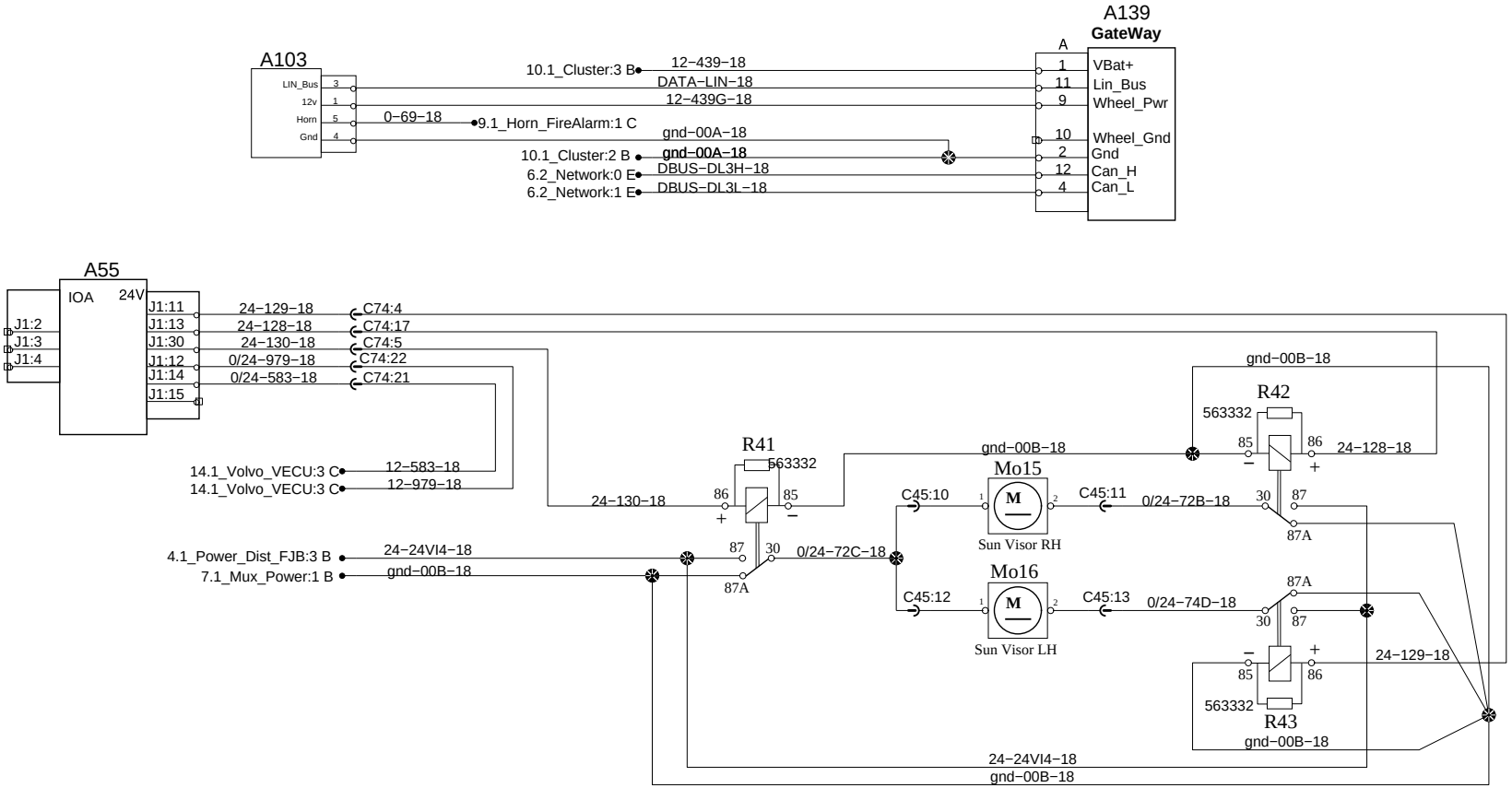

Adaptative Cruise Control Radar

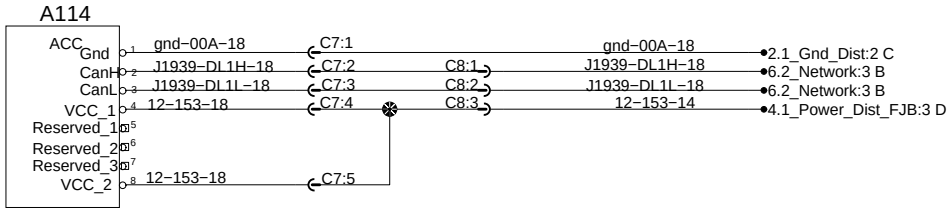

To Cruise Control

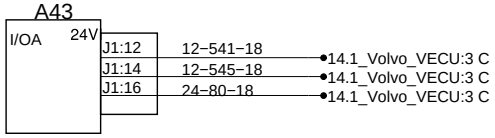

To Converter Interface

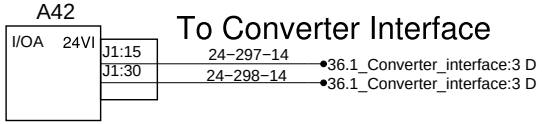

Steering Multifunctions & Sun Visor

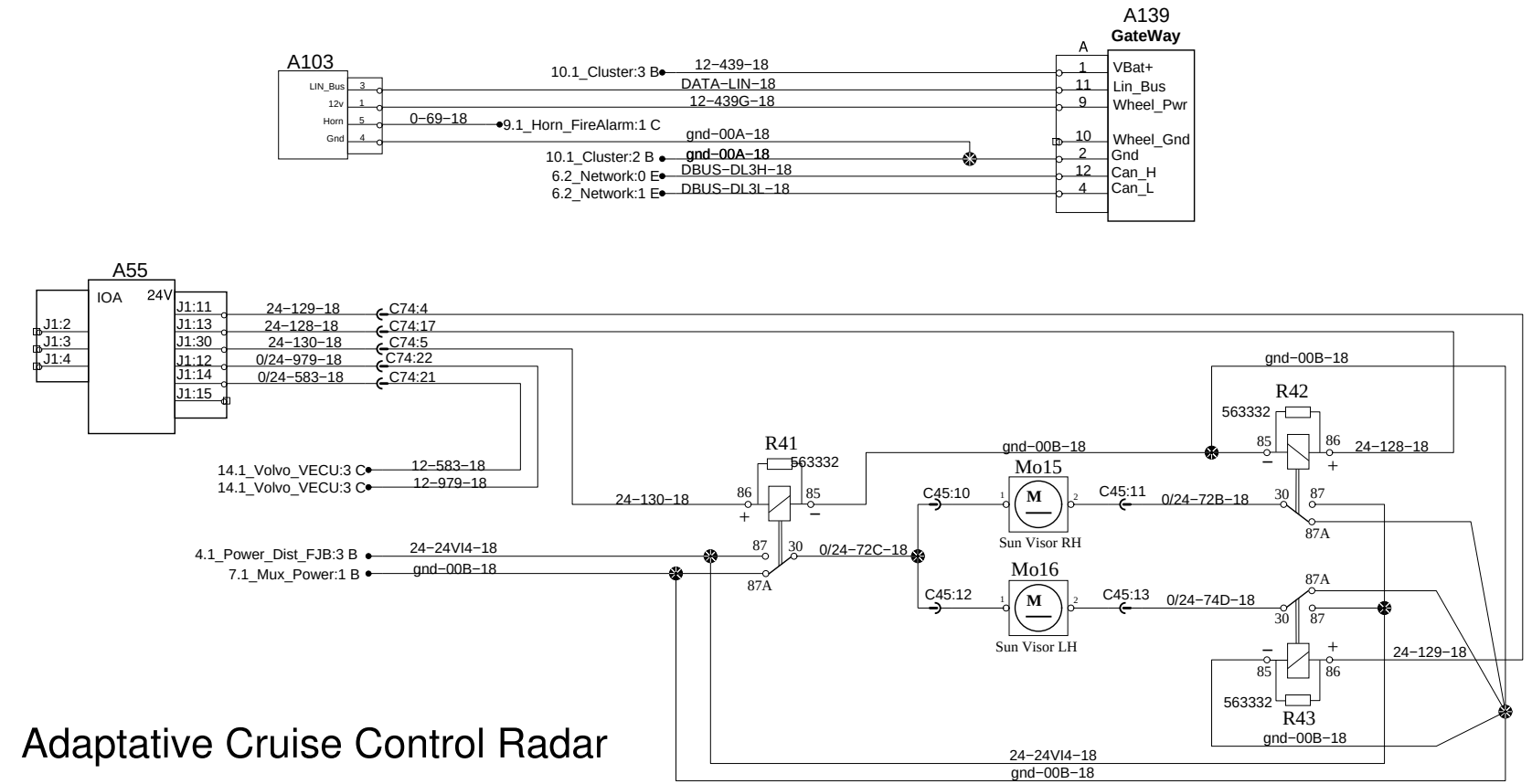

Adaptative Cruise Control Radar

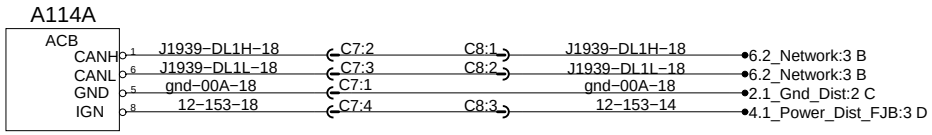

To Cruise Control

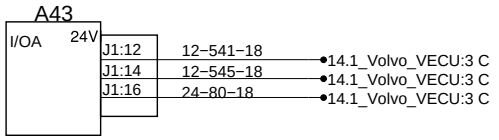

To Converter Interface

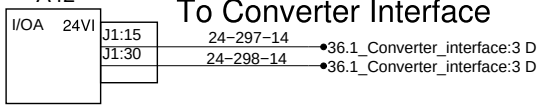

Steering Multifunctions & Sun Visor

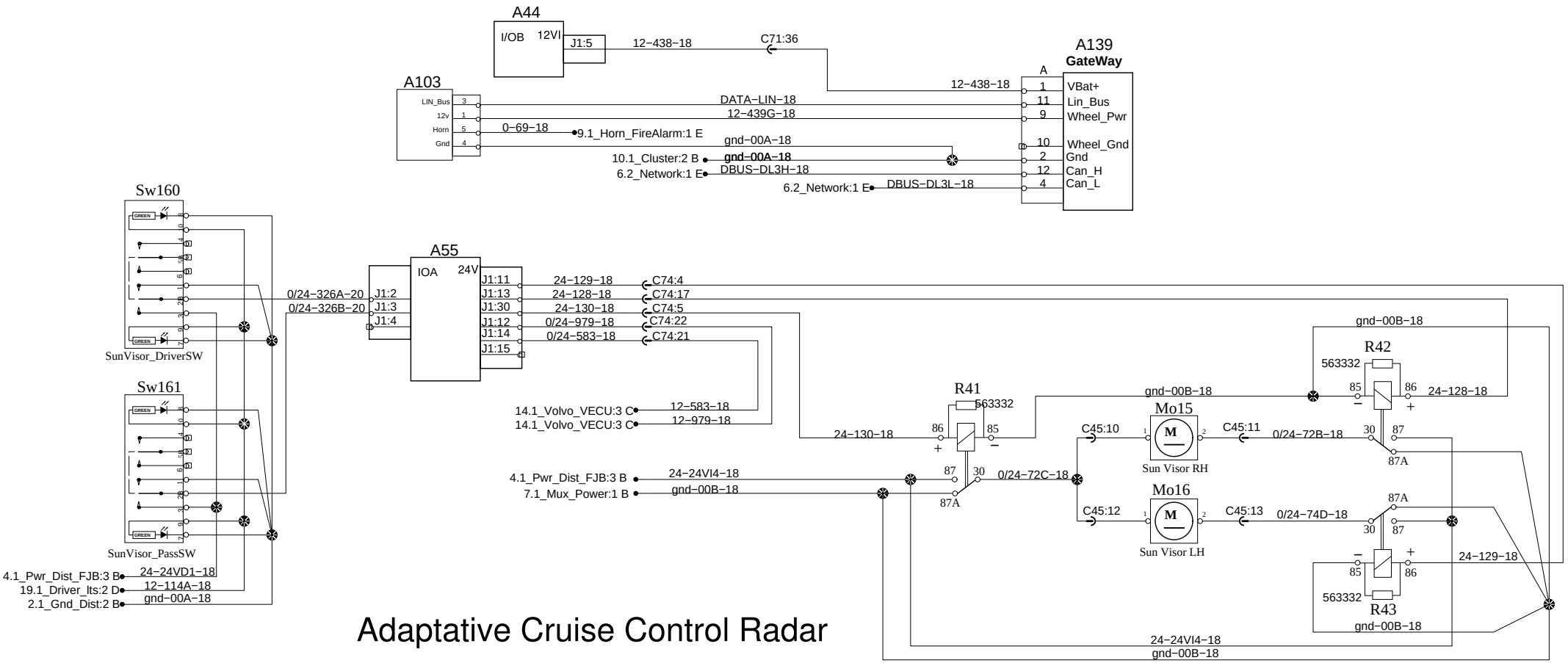

Adaptative Cruise Control Radar

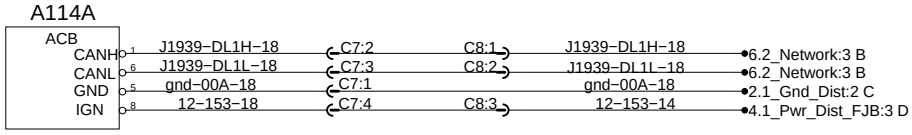

To Cruise Control

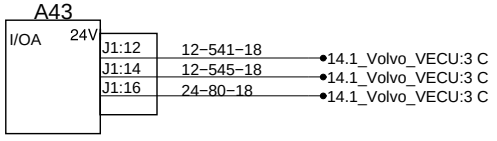

To Converter Interface

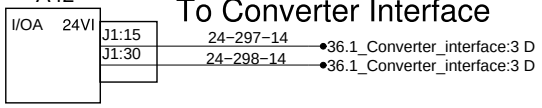

Steering Multifunctions & Sun Visor

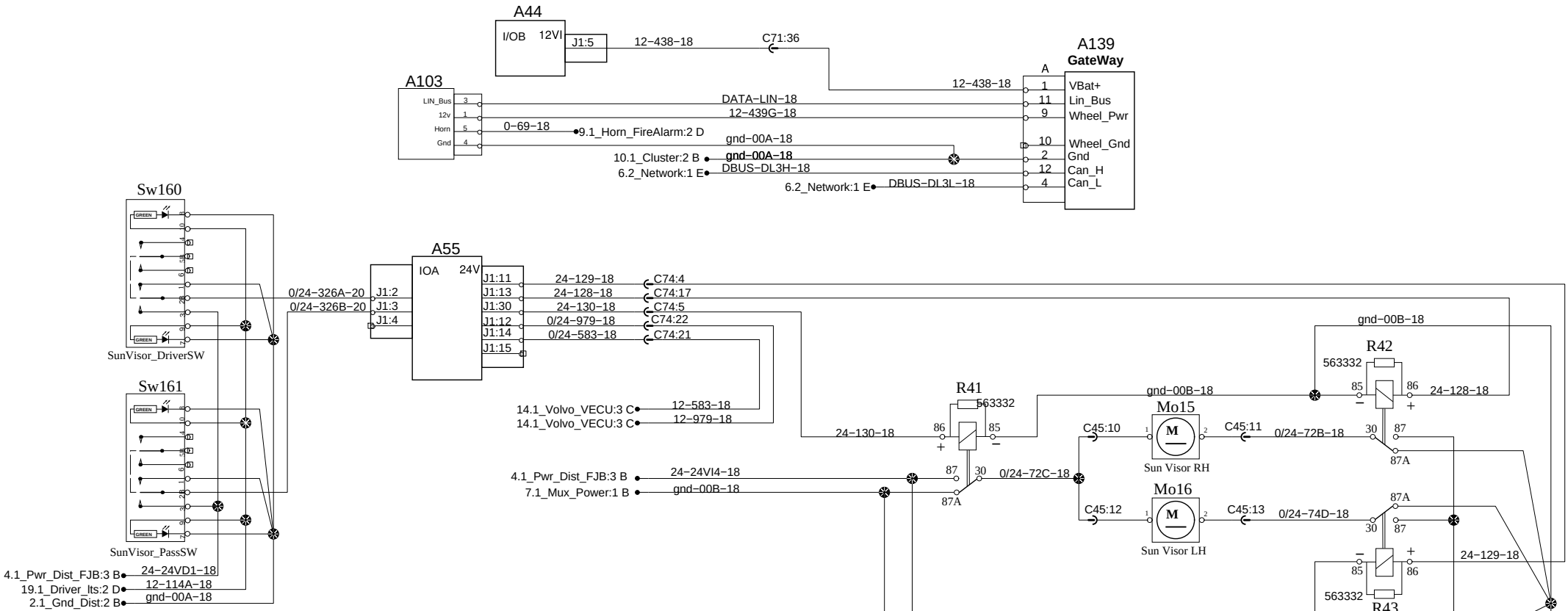

Adaptative Cruise Control Radar

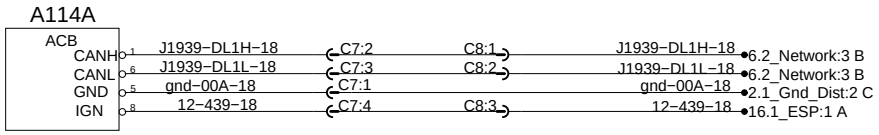

To Cruise Control

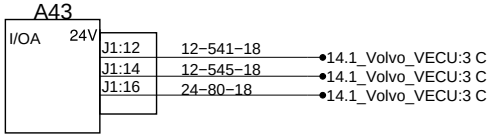

To Converter Interface

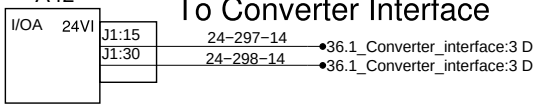

Tire Pressure Monitoring System

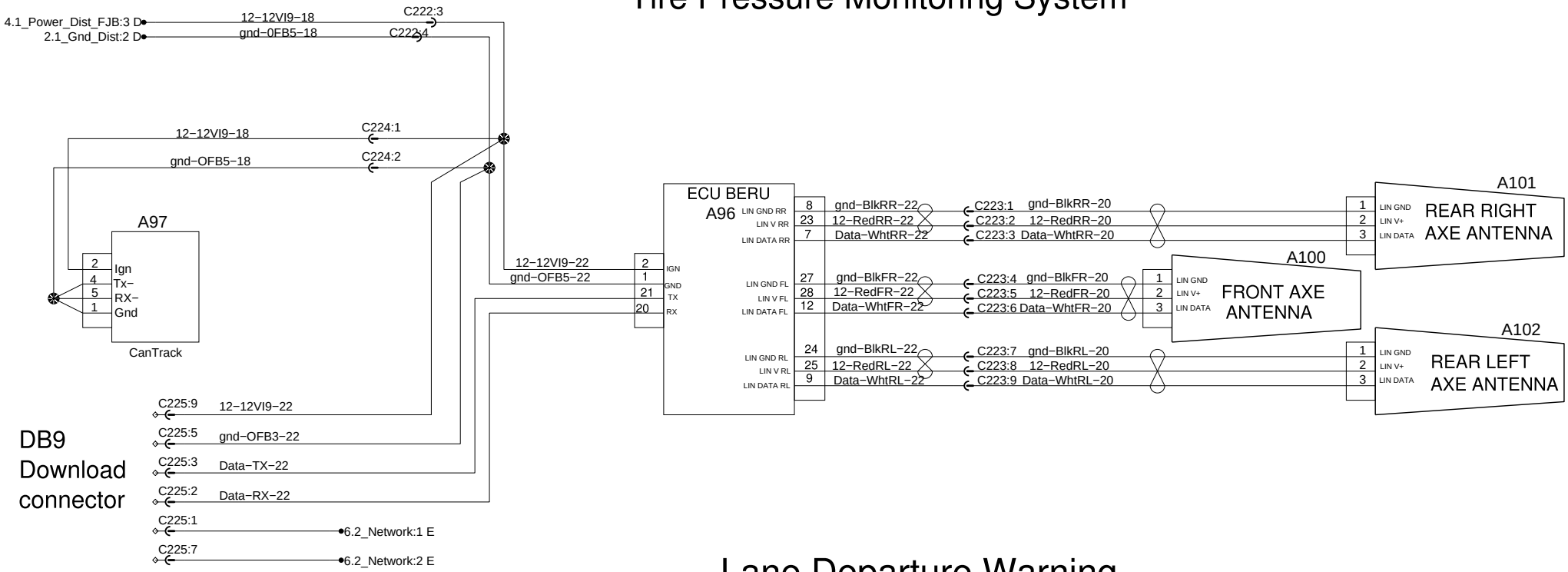

Lane Departure Warning

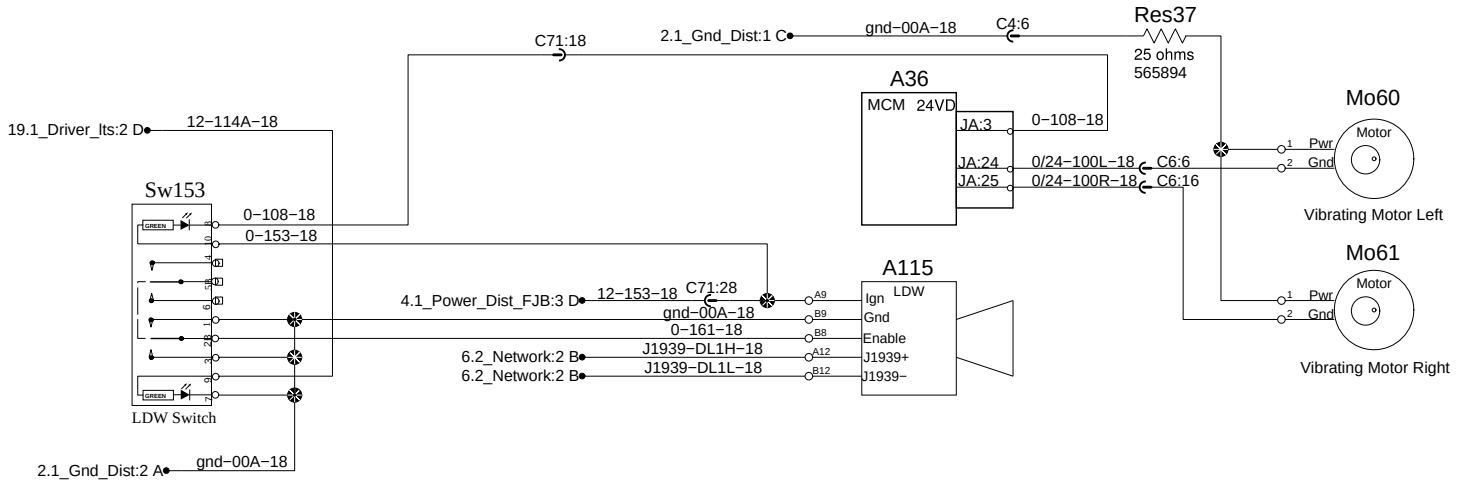

Automatic Fire Suppression System

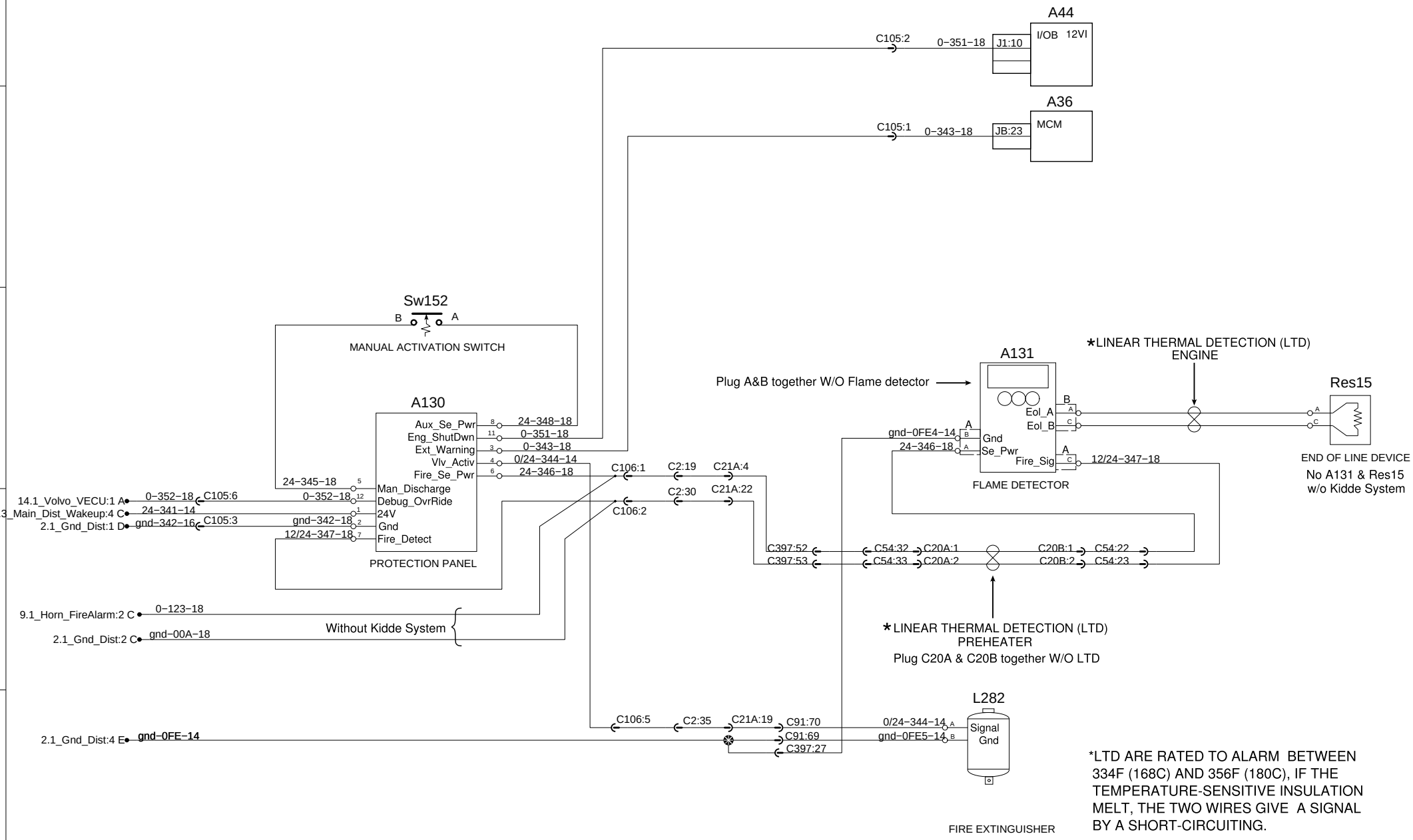

Automatic Fire Suppression System

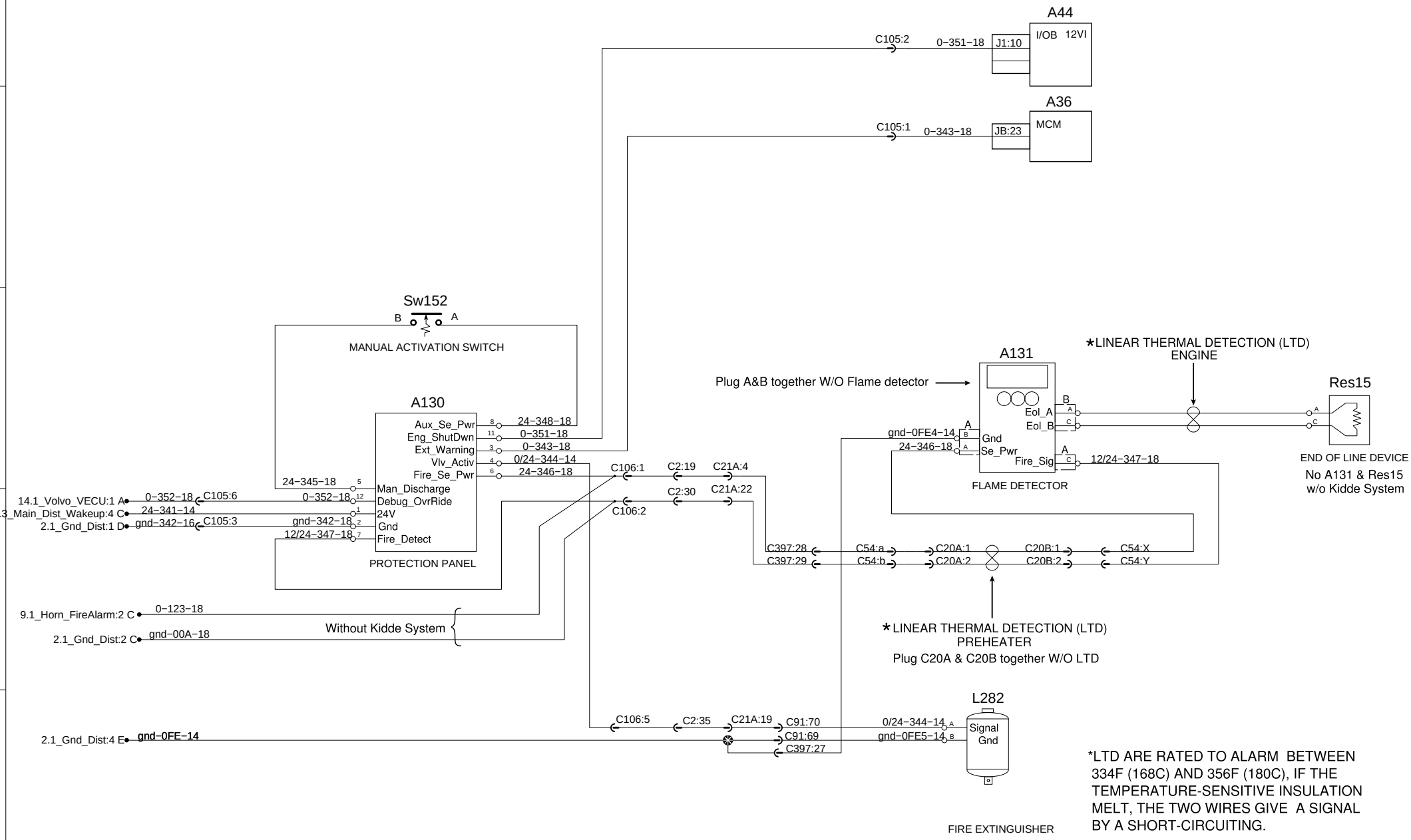

Automatic Fire Suppression System

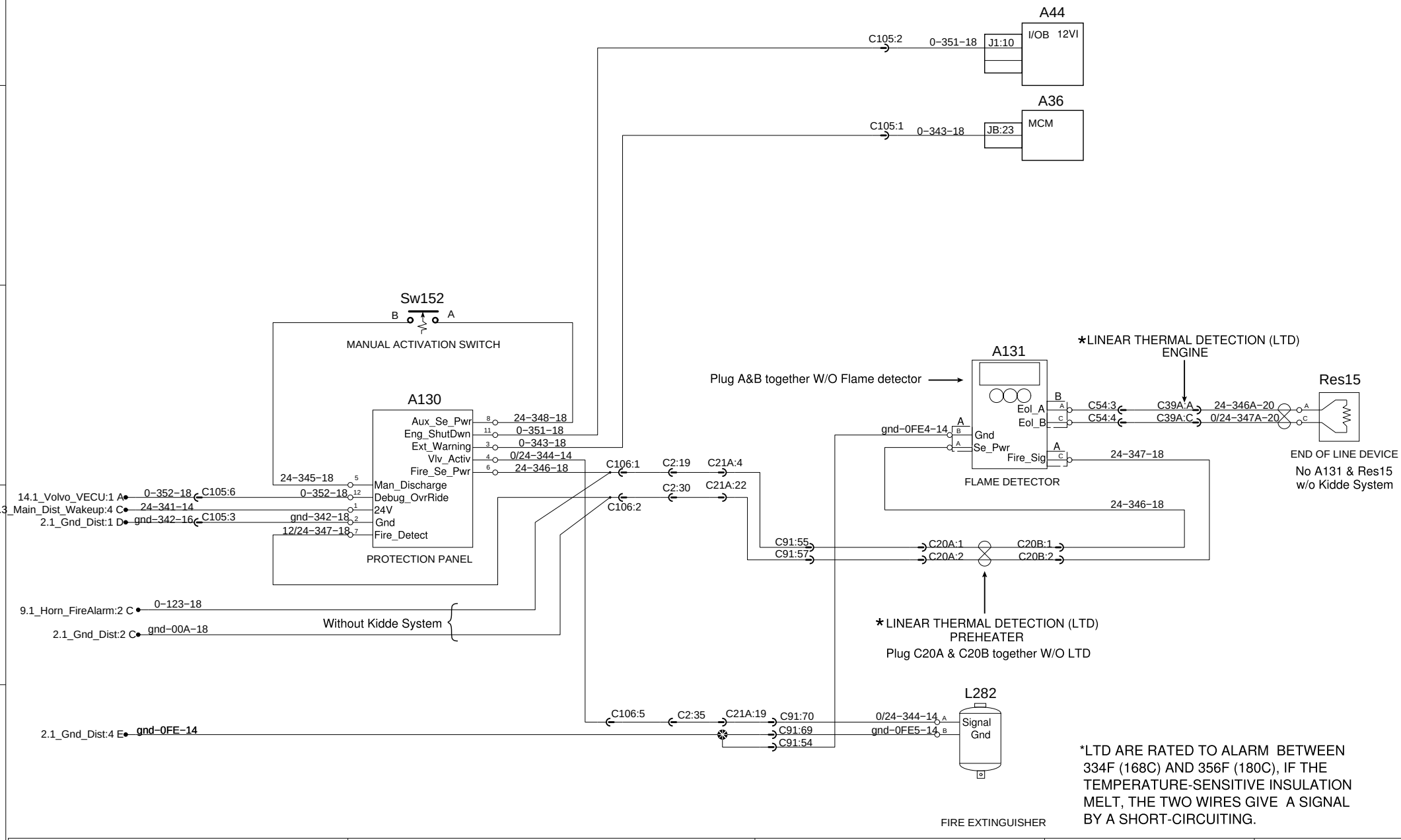

*LTD ARE RATED TO ALARM BETWEEN 334F (168C) AND 356F (180C), IF THE TEMPERATURE-SENSITIVE INSULATION MELT, THE TWO WIRES GIVE A SIGNAL BY A SHORT-CIRCUITING.